IP67 Waterproof MPPT solar controller 12V 24V 36V 48V 80A 100A

Feature

1.MPPT charge mode, conversion efficiency up to 99%.
2.12V/24V/36V/48V battery system automatic recognition, convenient for customers to use.
3.Maximum PV input voltage up to DC150V.
4.Support multi - machine parallel to realize system power upgrade
5. It has a current limiting charging function. When the power of PV is too large, the controller automatically keeps the charging power, and the charging current will not exceed the rated value.
6.Discharge mode: ON/OFF mode, double time control mode, PV voltage control mode ,PV voltage+time delay mode and so on .
7.Recommended battery types: sealed lead acid, Vented, Gel, NiCd battery. Other types of the batteries can also be defined, such as lithium battery etc.
8.RS485 communication, we can offer communication protocol to convenient user's integrated management and secondary development
9. Support PC software monitoring and WiFi module to realize APP cloud monitoring.
10.CE,ROHS,FCC certifications approved, other certifications can also be made based on different requirements.
11. 2 years warranty and 2~10 years extended technical service.

Parameter

MARS series		48BL-80A	48BL-100A	48BH-80A	96BH-50A
Product category	Controller Properties	MPPT (maximum power point tracking)			
	MPPT efficiency	≥99.5%			
	Standby power	0.5W~1.2W			
	System voltage	Automatic recognition		48V	96V
	Heat-dissipating method	Air cooling			

Input Characteristics	Max.PV input voltage(VOC)		DC150V		DC300V	
	Start the charge voltage point		Battery voltage + 3V		Battery voltage + 10V	
	Low input voltage protection point		Battery voltage + 2V		Battery voltage + 5V	
	Over voltage protection point		DC150V		DC300V	
	Rated PV power	12V system	1040W	1300W	□	□
		24V system	2080W	2600W	□	□
		36V system	3120W	3900W	□	□
		48V system	4160W	5200W	4160W	□
		96V system	□	□	□	5200W
Charge Characteristics	Selectable Battery Types (Default Gel battery)		Sealed lead acid, Gel battery, Flooded (Other types of the batteries also can be defined)			
	Charge rated current		80A	100A	80A	50A
	Charging Method		3-Stage: constant current(fast charging)-constant voltage-floating charge			
LOAD Characteristics	Load voltage		The same as the battery voltage			
	Load rated current		80A	100A	80A	50A
	Load control mode		On\Off mode, PV voltage control mode, Dual-time control mode, PV + Time control mode			
Display & Communication	Display mode		High-definition LCD segment code backlight display			
	Communication mode		8-pin RJ45 port/RS485/support PC software monitoring/support WiFi module to realize APP cloud monitoring			
Other Parameters	Protect function		Input-output over \ under voltage protection,Prevention of connection reverse protection,battery shedding protection etc.			
	Operation Temperature		-20℃~+50℃			
	Storage Temperature		-40℃~+75℃			
	IP(Ingress protection)		IP67			
	Max. connection size		50mm2			
	Net Weight (kg)		12.8			
	Gross Weight (kg)		13			
	Product Size□mm□		500*350*140			
	Packing Size(mm)		610*448*265			

Parallel connection diagram

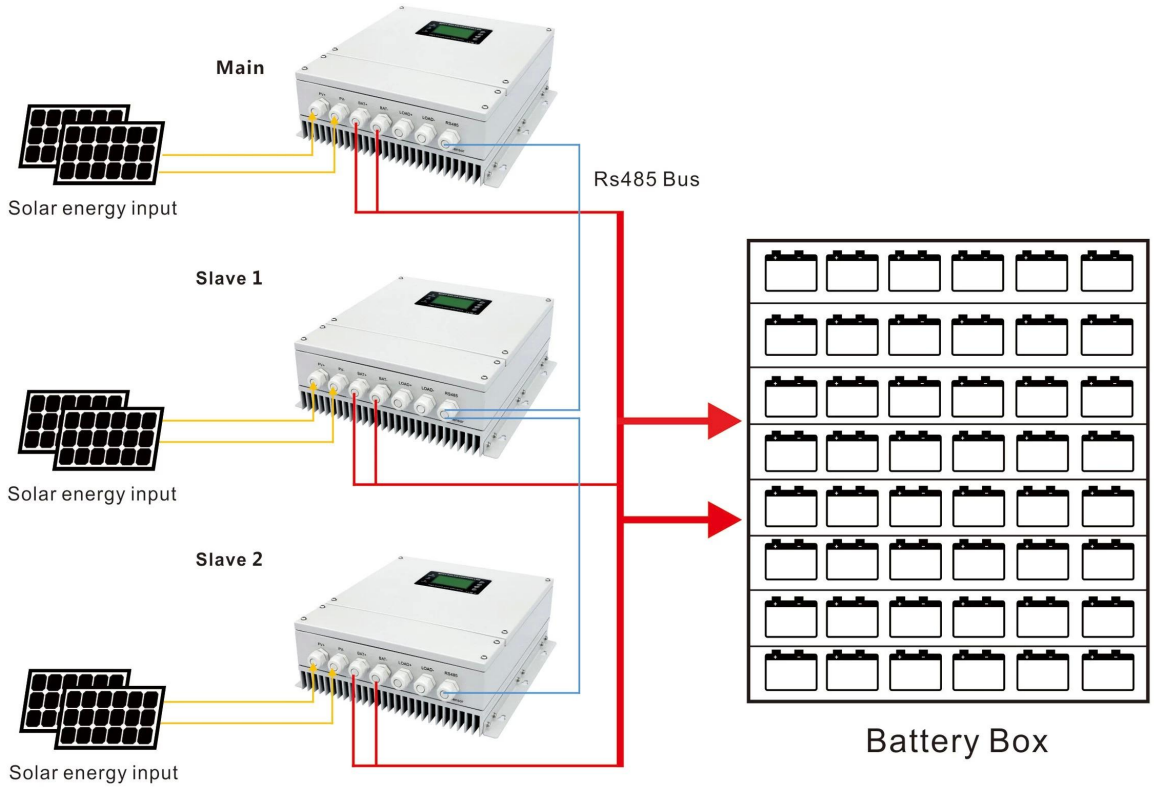
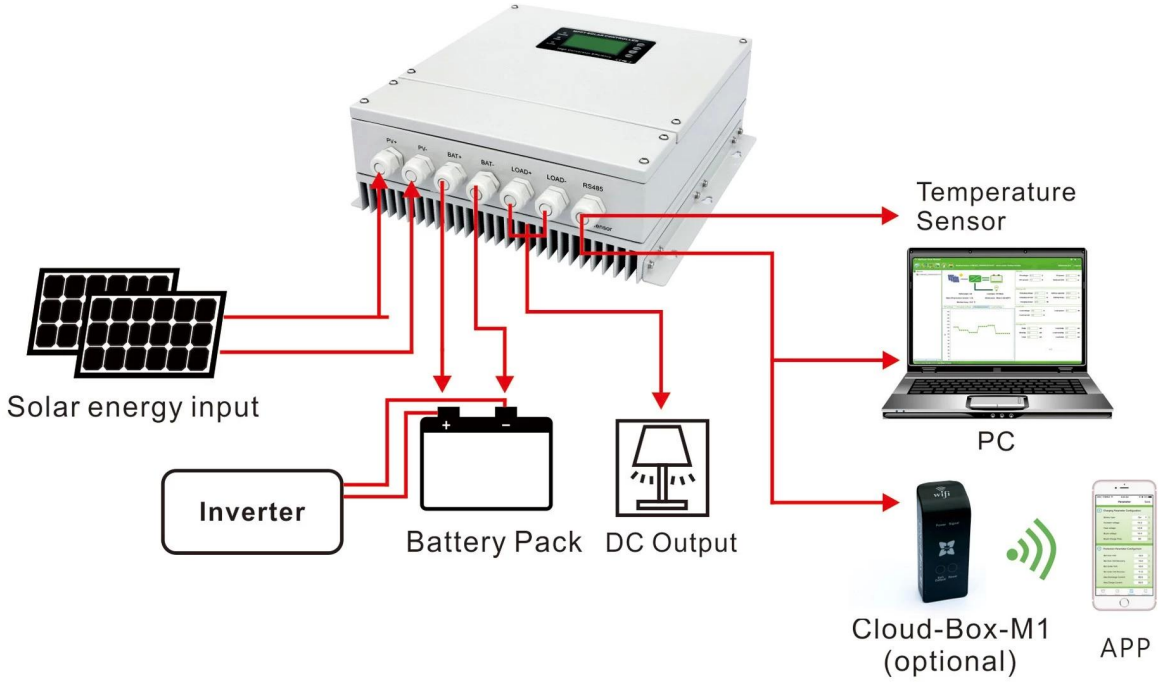
System connection diagram