I-P-SPC Series Low Frequency SolarPower Inverter with Built-in Solar Charge Controller 15000w

Component

1)Highquality low frequency pure sine wave inverter(with utility charge functionand UPS function)

2)Built-in PWMsolar power charge controller

Application

1)Off-grid solar power system

2) Utility and solar complementarypower generation system

Features

1) Easy toinstall. To configure a solar system, users just need to connect it with solarpanels and batteries.

2)CPUmanagement,Intelligent control,modular design

3)LEDs LCDdisplay. LCD can display various parameters(such as the output voltage, frequency,working mode)

4)Multifunctiondesign, AVR UPS function. Users don’t need to buy solar, controller, AC chargeror stabilizer.

5) External battery connection, it’sconvenient for users to expand use time and back-up power time

6)Withsuper load-carrying ability and high load capacity, this series of inverters can not only drive resistance load;but also various kinds of inductive loads such as motor, air conditioner,electric drills, fluorescent lamp, gas lamp. It can drive almost any kinds ofload

7)Lowfrequency pure sine wave circuit design, stable quality, easy to maintenance, lowfailure rate and long service life (underproper operation, it can last atleast 5 years)

8) Perfectprotection: low voltage protection, high voltage protection, over temperature protection,short-circuit protection, overload protection

9) CE /EMC / LVD/ RoHS /FCC approvals

10) 2years warranty, life-long technicalsupport

Function

Off-grid solarpower system

1. When connected withbattery and AC loads,users can set it to normal working mode or sleep mode.

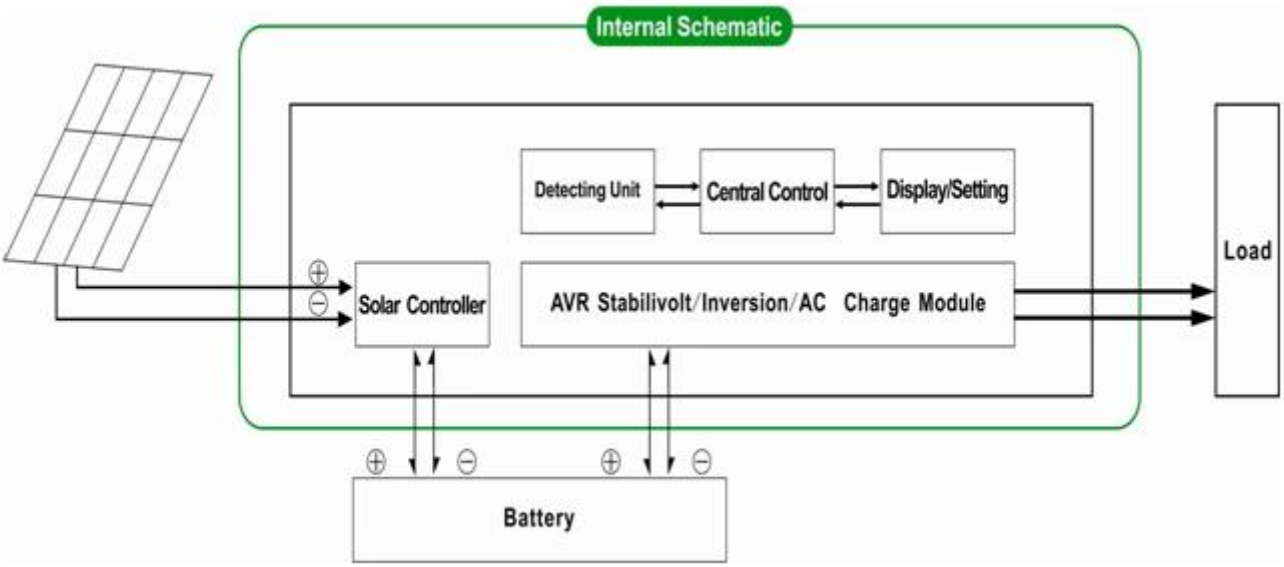

1.1 Normal workingmode FREQUENCY inthe LCD display is set to 01. No matterit's connected AC loads or not, the inverter always convert DC to AC. It's ready to supply power to the AC loads. Inthis mode, the LCD will display output voltage as bellow:

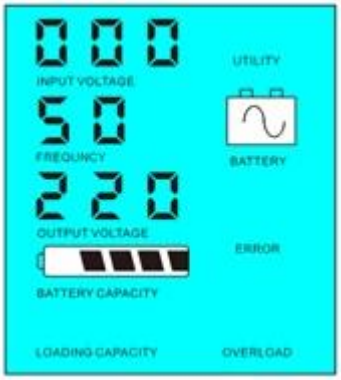

1.2 Sleep mode FREQUNCYin the LCD display is set as 02.If the power of the connected AC loads is lowerthan 5% of the inverter's rated power, there will be no output from theinverter. Only the chip of inverter is working. The power consumption of theinverter is only 1-6W. The LCD shows the output voltage 0. If the power of theconnected loads is over 5%,then the inverter will automatically convert DC toAC to supply power for the loads within 5s. The LCD shows the output voltage.As shown below:

Load's power< 5% of inverter's rated power

Load's power> 5% of inverter's rated power

Kindly note:

1) Only the solar panel charges thebattery

2) Off-grid solar power system. Itis suitable for areas that are lack of utility or plentiful solar

Utility andsolar complementary power generation system

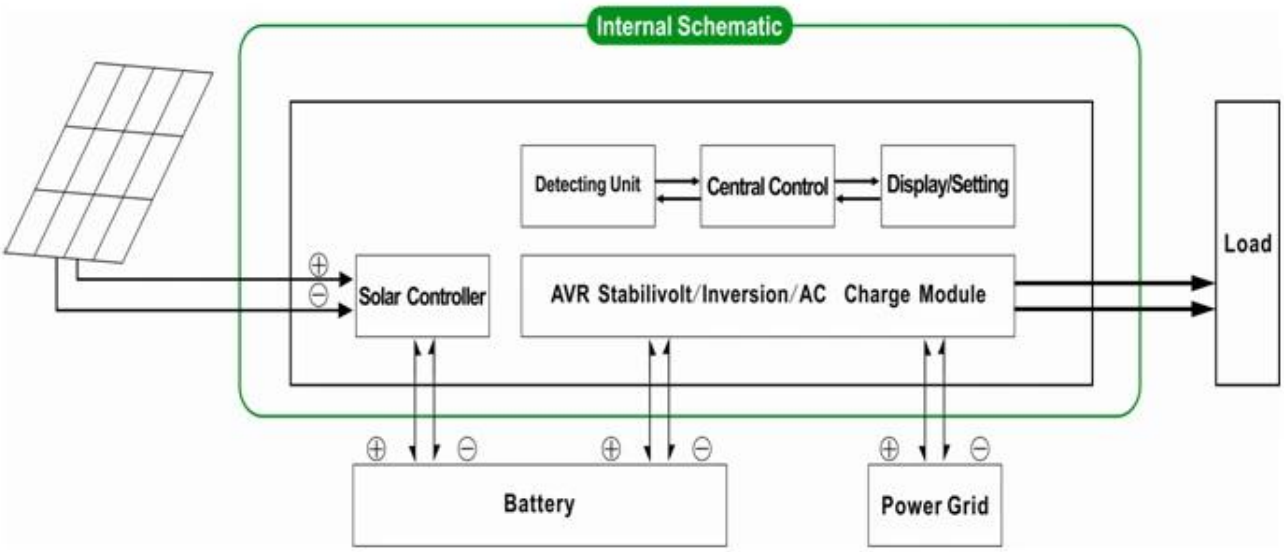

2. UPSfunction When the inverter is connectedto battery and utility, users can set it to utility first (AC first) batterystandby mode or battery first (DC first)utility standby mode.

2.1.Utilityfirst (AC first) battery standby mode : FREQUENCY in the LCD display is set to 01.When utility and battery are connected to the inverter, utility will supplypower to the loads prior. When utility is cut off, the battery willautomatically continue to supply power via power inverter.

Stepsare as follows:

Step1: When utility is available, it will drive the loads directly after voltagebeing stabilized and at the same time charge batteries via power inverter .

Step2: When utility is cut off, the inverter will convert DC to AC automatically toensure uninterrupted power supply within 5ms.

Step3: When utility is available again, inverter will automatically transfer toutility supplying power to loads and charge batteries via power inverter at thesame time.

See Workflowas below.

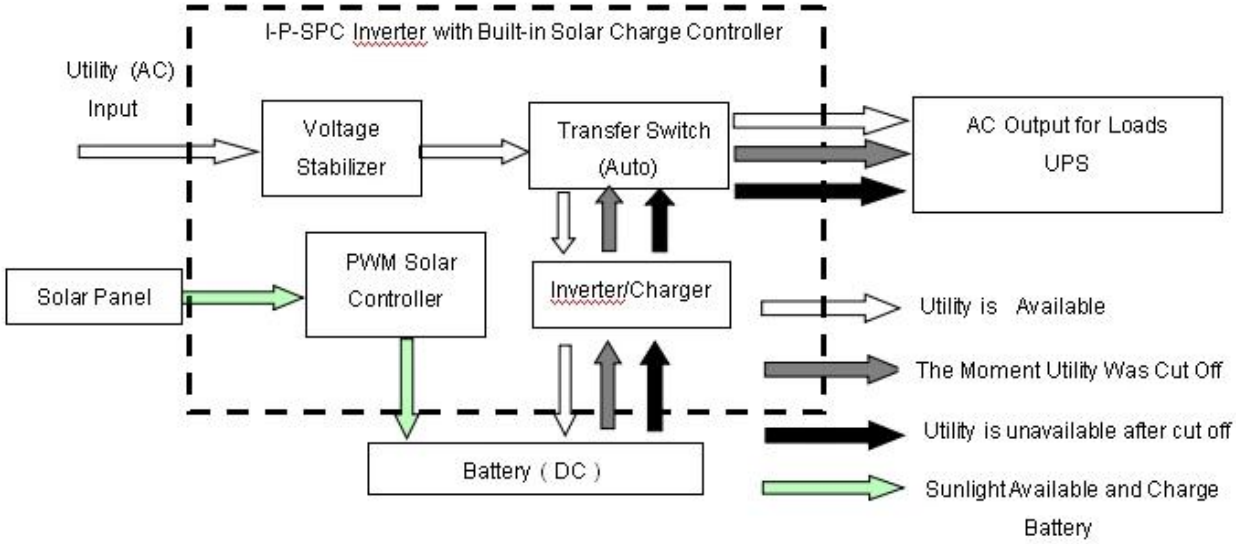

LCDdisplayed as bellow:

Utility supply power and charge battery

Without utility and battery supply power

Kindly note:

1) There are 2 ways to charge thebattery, utility and solar panel

2) This system is suitable for powersystems built in areas that are lack of utility. Or people can use solar andutility at the same time.

2.2. Batteryfirst (DC first)utility standy mode: FREQUENCY in the LCD display is set as 03. When utility andbattery are connected to the inverter, battery will supply power to the loadsprior to utility. When

battery capacity is not enough, utility will continue tosupply power automatically.

Steps are as follows:

Step1: When battery is available, it will drive the AC loads via power inverter.

Step2: When battery does not have enough power, it will automatically transfer toutility supplying power to the loads

Step3: After the battery is fully charged (e.g. by solar or wind chargecontroller), it will automatically transfer to battery supplying power to theloads via power inverter.

See Workflowas below.

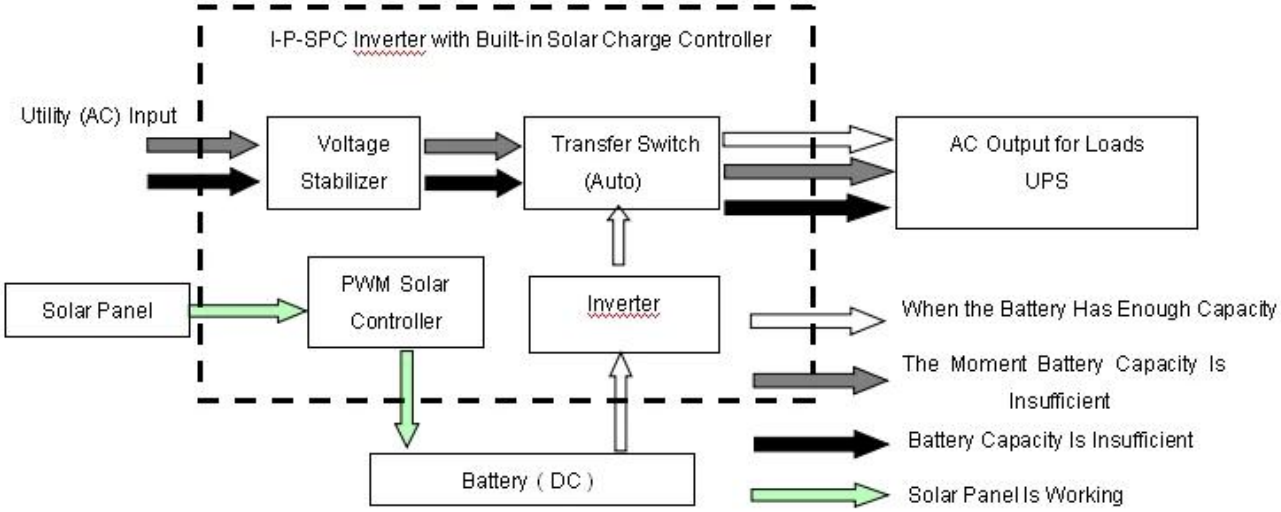

LCDdisplayed as bellow:

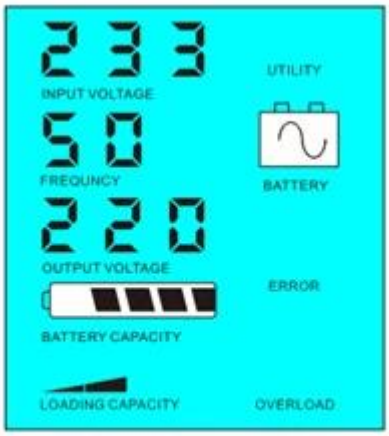

Battery available to supply power

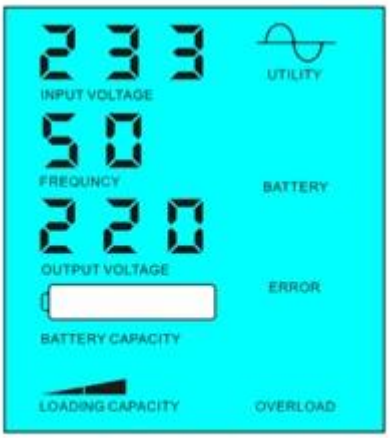

Battery unavailable,utility supply power

Kindlynote:

1)There is only one way to charge the battery: solar panel

2) This system is suitable for areas whereelectricity is expensive or environmental areas where solar

power can be fullyused to save utility bill.such as home solar&wind system,streetlightsolar&wind system

Parameter

Mode		20KVA
Rated Output Capacity		15KW
Peak Power		30KW
Battery Voltage(DC)		192V
PWM Solar Controller	Voltage	192V
	Current	50A
	PV Max Input Voltage	400V
Size W×D×H(mm)		420*280*625
Packing Size W×D×H(mm)		440*300*645
Net Weight (kg)		105
Gross Weight (kg)		115
General Parameter		
Working Mode (Setting)	1	Utility first (AC first) battery standby mode
	2	Sleep Mode,no utility,load’s power is over 5% of rated output power, Inverter start to work automatically
	3	Battery first (DC first)utility standby mode
AC Input	Voltage	220V±35% or 110V+35%（Optional）
	Frequency	50Hz±3% or 60Hz±3% （Optional）
AC Output	Voltage	220V±3% or 230V±3 or240V±3% or 100V±3% or 110V±3% (Optional)
	Frequency	50Hz±0.5 or 60Hz±0.5 (Optional)
Utility charge	AC Charge Current	0~15A
	Charge Time	Depend on battery capacity and quantity
	Battery Protection	Automatic detection, Charge and discharge protection（Intelligent Management
PV Charge		Total Current of PV Input Should Be Less Than Rated Current of PWM solar controller
Display	Display Mode	LCD+LED
	Display Information	Input voltage（output voltage（output frequency（battery capacity（Load condition（Status Information
Output Wave Type		Pure sine wave output,Total Harmonic Distortion THD≤3
Overload Ability		（120% 1 min）（130% 10s
Power Consumption	Sleep Mode	1~6W
	Normal Mode	1~3A
Conversion Efficiency		80%~90%
Transfer Time		（5ms （AC to DC / DC to AC）
Protection		Overload output（short-circuit（high-voltage input（low-voltage input（overheat
Environment	Temperature	-10℃（50℃
	Humidity	10%（90%
	Altitude	≤4000m

Theabove is our standard parameter. Subject to change without prior notice.

Wehave our own professional inverter and controller R&D team and we provide technical support and OEM ODMservice

Thecontroller information above is our company’s standard parameter.It can bechanged to other PWM solar charge controller.

ConnectionDiagram

Others

Please see theoutline of the design,technical documents,user manuals,product brochures,etc.Research and development department made 1st edition on May 5, 2014..