Specification of High quality Intelligent Inverter with Built-in MPPT Controller I-P-HPC series

Introduction

This series of product is a module design of inverter and built-in MPPT controller, which has the advantages of high conversion efficiency, low power consumption and strong load-carrying ability. With intelligent control, customers can set charging mode, (Utility as complementary power) AC first mode or DC first mode, timed inversion mode and timed utility mode, timed on/off sleep mode. This is the currently the most advanced inverter & controller hybrid in the world.

Application

1. Off-grid solar power system
2. Solar power system with utility as complementary power

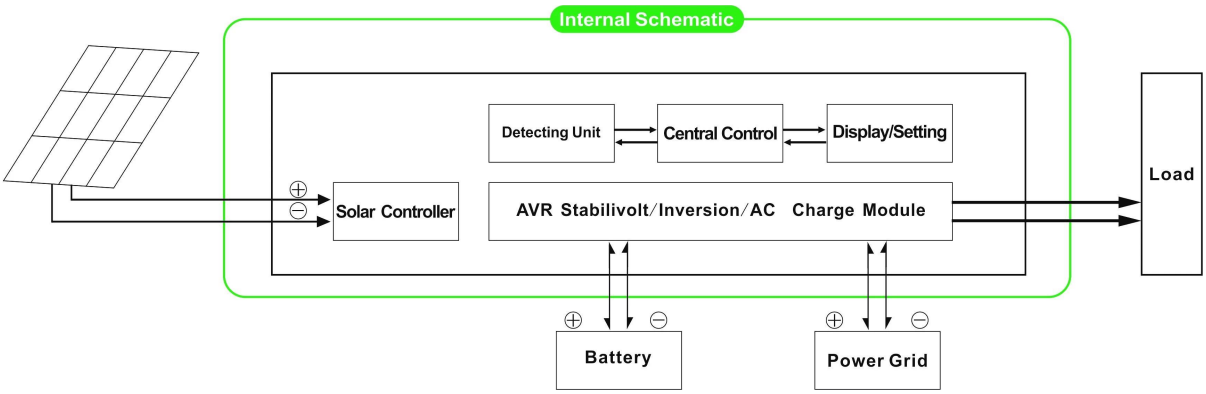

Feature

1. Easy to install. To configure a solar system, customers only need to connect it with solar panels and batteries

2. CPU management ,intelligent control modular design, User-friendly LCD display

3. Built-in MPPT controller, high charging efficiency

4. Low power consumption, high conversion efficiency

5. Intellectual multi-function, convenient for customers with different using environment to fully use the solar energy

6. External battery connection, convenient to expand back-up power time

7. Strong load-carrying ability, low failure rate, easy maintenance and long service life (under proper operation, it may be as long as 5 years)

8. Perfect protection: low voltage protection, over voltage protection, overheat protection, short-circuit protection, overloads protection

9. CE / EMC / LVD/ RoHS Approvals

10. Two years warranty, life-long technical supports

Function
1. Charging function
There are 2 modes as shown bellow:

1.1 PV charge the battery, utility will not: when PV and utility are both connected to the machine, only the PV will charge the battery when there is sunlight
1.2 Both PV and utility will charge the battery: when PV and utility are both connected to the machine, AC (utility) will charge the battery. In the meanwhile, PV will also charge the battery if there is sunlight.

2. Utility as complementary power function
There are 2 kinds of complementary modes, shown as bellow:

2.1 AC first , DC standby UPS mode

When both utility and battery are connected to the machine, utility will supply power to the loads prior to the battery. When utility is cut off, the battery will automatically continue to supply power.

Steps are as follows:

Step 1: When utility power is available, it will output directly after voltage being stabilized and charge batteries at the same time.
Step 2: When utility power is cut off suddenly, the inverter will convert DC power to AC power automatically to ensure uninterrupted power supply within 5ms.
Step 3: When utility power becomes available again, it will automatically transfer to utility supplying power to loads and charge batteries at the same time.

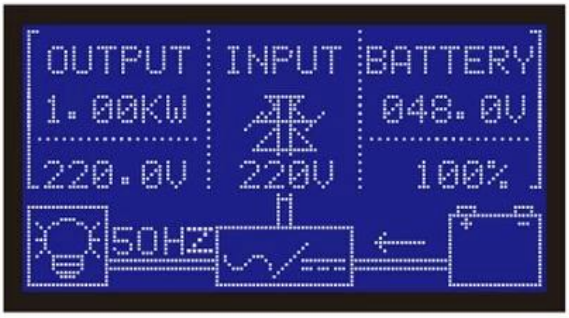

Photos :

Parameter:

Parameter Model		1500W
Rated Output Power		1500W
Peak Power		.3000W
Battery (Lead-acid battery)		24V
Charging Parameter		
Charge Mode(setting)		PV charge PV charge + utility charge
MPPT Solar Controller	Voltage	24V
	Current	25A
	Max PV Input Voltage	100V
	PV Charge Efficiency	95%~99%
	Max PV Input Power	710W
Utility	AC Charge Current	0~15A
	Charge Mode	3-Stage Charging
Inversion parameter		

AC Output	Voltage	220V±3% or 230V±3 or 240V±3% or 100V±3% or 110V±3% （optional）
	Frequency	50Hz±0.5 or 60Hz±0.5 （optional）
Output wave type		Pure sine wave output, waveform distortion rate≤3
Overload ability		（120% 1 min, （130% 10s
Power Consumption (under normal working mode)		0.5A
Power Consumption (under sleep mode)		1-6W
Inverter Conversion Efficiency		85%~92%
Utility Mode		
AC Input	Voltage	220V±35% or 110V+35%（optional）
	Frequency	The same as utility
AC Output	Voltage	220V±5% or 110V+5%（optional）
	Frequency	The same as utility
Overload Ability		（120% 1 min）（130% 10s
(AC first or DC first) priority		
UPS Output（setting）		AC first, DC standby DC first, AC standby
Switch Time		（5ms （AC to DC / DC to AC）
Power On （setting）		Set by users Timed open / close AC output automatically
General Parameter		
Display	Display Mode	LCD+LED
	Display Information	Input voltage, output voltage, output frequency, battery capacity, Load condition, Status Information
Protection		Overload output, short-circuit, high-voltage input, low-voltage input, overheat
Environment	Temperature	-10℃（50℃
	humidity	10%（90%
	Altitude	≤4000m
Size W×D×H(mm)		438*208*413
Packing Size W×D×H(mm)		520*310*460
Net Weight (kg)		17
Gross Weight (kg)		18

Remarks:

The “optional” parameter can be set as per customer’s requirement

The above is our standard parameter. Subject to change without prior notice.

We have our own professional inverter and controller R&D team and we provide technical support and OEM service.

Connection Diagram:

Others :
Please refer to the outline design, technical documents, product brochures, etc.
Made by Engineering Department, May 15, 2014, 2nd Edition

Company

I-Panda爱麦德

09/04/2013 14:36

大功率
自检区

Mundial SA

UPS

FedEx Express

EMS

TNT

DHL

中外运敦豪