High Power and Voltage 96V 192V 216V 240V 384V MPPT solar controller

GALAXY series is a Maximum Power Point tracking(MPPT) function with high efficiency MPPT charge controller It has many advantages such as wide rang of PV input, charger voltage can be set, RS485 or RS232 (optional) and LAN communication port. Modular design,Small volume, light weight, high conversion efficiency. It is the most high-end product in solar market.

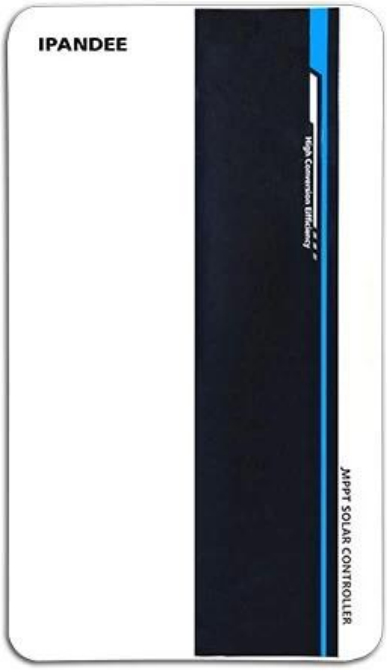

Product Model

Model	Battery system	Max. PV input voltage	Rated current

GALAXY-B96-XXA	96V□8*12V)	430V	70A;80A
GALAXY-B192-XXA	192V□16*12V□	430V	50A;60A
GALAXY-B216□220□-XXA	216V□18*12V□		
GALAXY-B240-XXA	240V□20*12V□		
GALAXY-B384-XXA	384V□32*12V□	850V	70A;80A

Feature

1.It has an efficient MPPT algorithm, MPPT efficiency ≥99.5%□and converter efficiency up to 98%.
2.Charge mode: three stages (constant current, constant voltage, floating charge), it prolongs service life of the batteries.
3.Four types of load mode selection: ON/OFF, PV voltage control, Dual Time control, PV+Time control .
4.Three kinds of commonly used lead-acid battery (Seal\Gel\Flooded) parameter settings fcan be selected by the user, and the user can also customize the parameters for other battery charging.
5.It has a current limiting charging function. When the power of PV is too large, the controller automatically keeps the charging power, and the charging current will not exceed the rated value.
6.Support multi - machine parallel to realize system power upgrade.
7.High definition LCD display function to check the device running data and working status, also can support modify the controller display parameter.
8.RS485 communication, we can offer communication protocol to convenient user's integrated management and secondary development.
9.Support PC software monitoring and WiFi module to realize APP cloud monitoring.
10.CE, RoHS, FCC certifications approved, we can assist clients to pass various certifications.
11.3 years warranty, and 3~10 years extended warranty service also can be provided.

PC software, Monitoring software, display and set the parameter

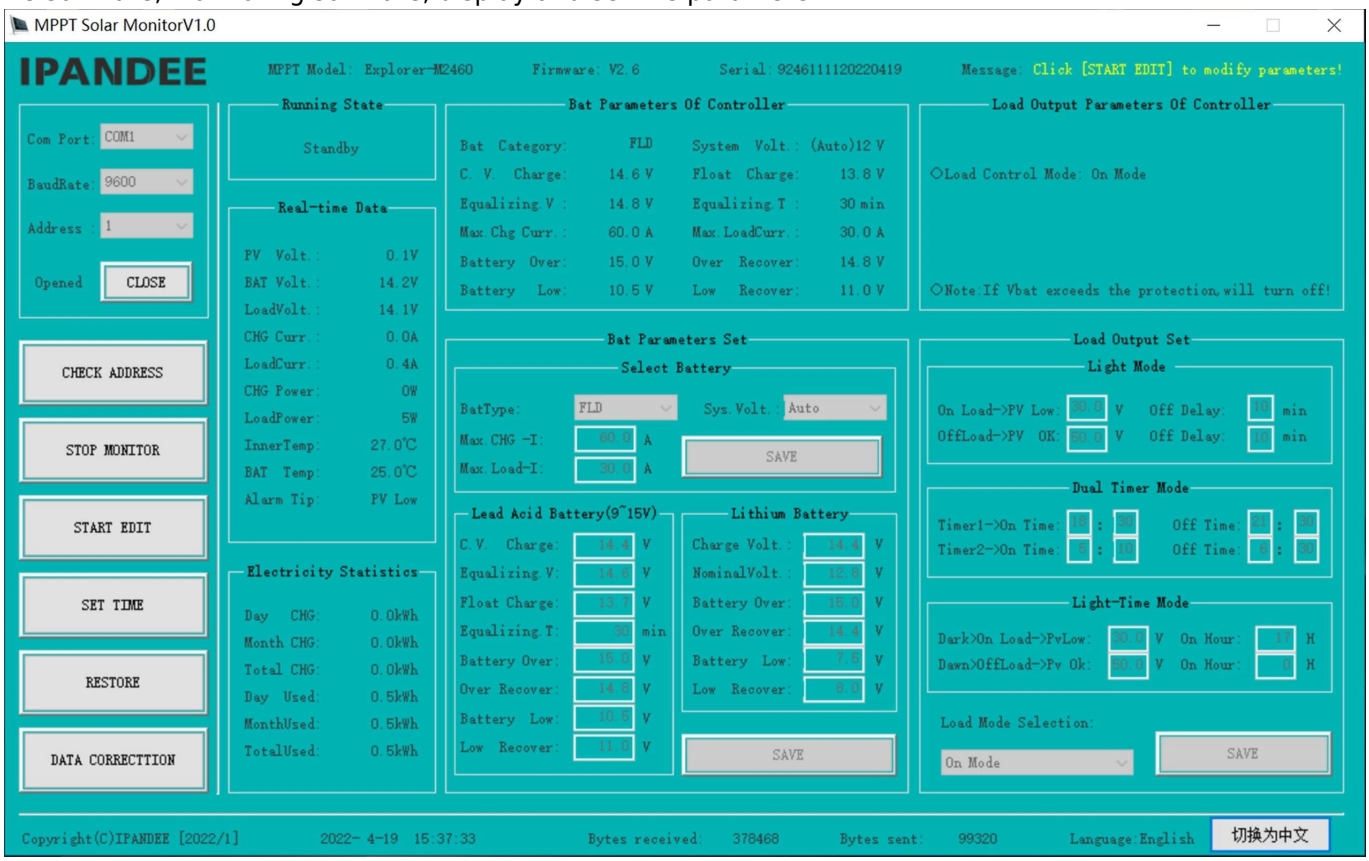

PC software

Display charge and discharge status, PV voltage, Charge voltage, Charge current etc. And the related parameter can be set.

parameter□□

GALAXY	Series	B96			B192\B216□220□\B240				
	Power model	70A	80A	100A	50A	60A	70A	80A	100A
Product category	Controller Properties	MPPT (maximum power point tracking)							
	MPPT efficiency	≥98%	≥98%	≥98%	≥98%	≥98%	≥98%	≥98%	≥98%
	System voltage	DC96V			DC192V\DC216V(DC220V)\DC240V				
	Range of Videntification	DC72V~DC128V			DC144V~DC256V\DC162V~DC288V\DC180V~DC320V				
	Heat-dissipating method	Intelligent fan cooling							
Input Characteristics	Open circuit Vmax-pv	DC430V			DC430V	DC430V	DC660V	DC660V	DC660V
	Start charge Vstart-pv	Vbat+20V	Vbat+20V	Vbat+20V	Vbat+20V	Vbat+20V	Vbat+20V	Vbat+20V	Vbat+20V
	Low protection Vlow-pv	Vbat+10V	Vbat+10V	Vbat+10V	Vbat+10V	Vbat+10V	Vbat+10V	Vbat+10V	Vbat+10V
	Over protection Vover-pv	DC430V	DC430V	DC430V	DC430V	DC430V	DC660V	DC660V	DC660V
	Rated PV power	7280W	8320W	10400	10400W\	12480W\	14560W\	16640W\	20800W\
					11700W\	14040W\	16380W\	18720W\	23400W\
					13000W	15600W	18200W	20800W	26000W
Charge Characteristics	Selectable Battery Types	Sealed lead acid, Gel battery, Flooded (Other types of the batteries also can be defined)-- Default Gel battery							
	Charge rated current	70A	80A	100A	50A	60A	70A	80A	100A
	Charging Method	3-Stage: constant current(fast charging)-constant voltage-floating charge							
LOAD Characteristics	Load voltage	The same as the battery voltage			The same as the battery voltage		□	□	□
	Load rated current	70A	80A	100A	50A	60A	□	□	□
	Load control mode	On\Off mode, PV voltage control mode, Dual-time control mode, PV + Time control mode					□	□	□
Display & Communication	Display mode	LCD128*64 dots/ backlight display							
	Communication mode	8-pin RJ45 port/RS485/support PC software monitoring/support WiFi module to realize APP cloud monitoring							
Other Parameters	Protect function	Input-output over \ under voltage protection, Prevention of connection reverse protection etc.							
	Operation Temperature	-20℃~+50℃							
	Storage Temperature	-40℃~+75℃							
	IP(Ingress protection)	IP21							
	Net Weight (kg)	14.7kg			14.7kg		18.8kg		
	Gross Weight (kg)	16.6kg			16.6kg		20.6kg		
	Product Size □mm□	371*500*187			371*500*187		391*500*227		
	Packing Size(mm)	590*420*270			590*420*270		590*440*320		

System connection diagram

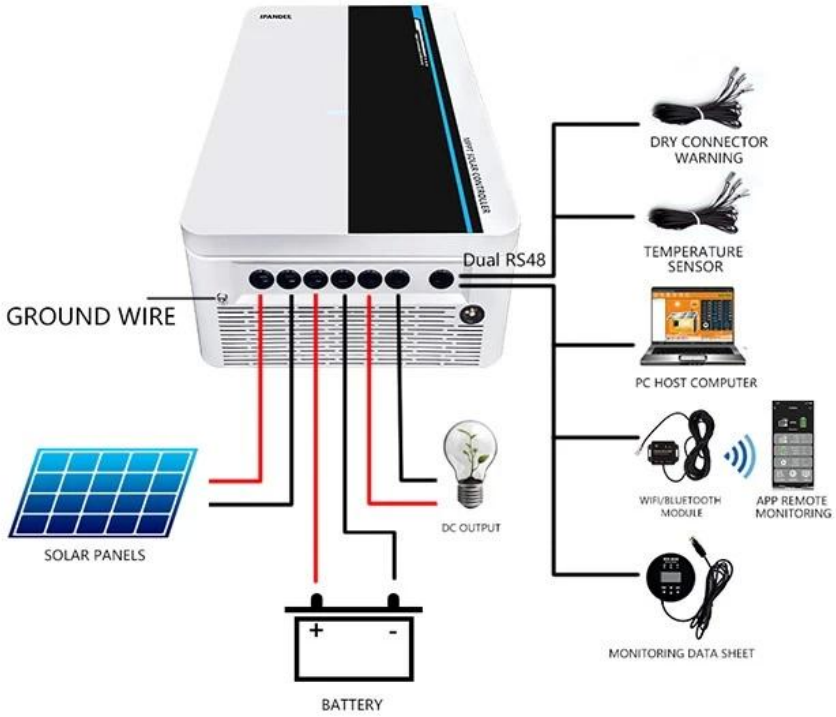

Parallel connection diagram

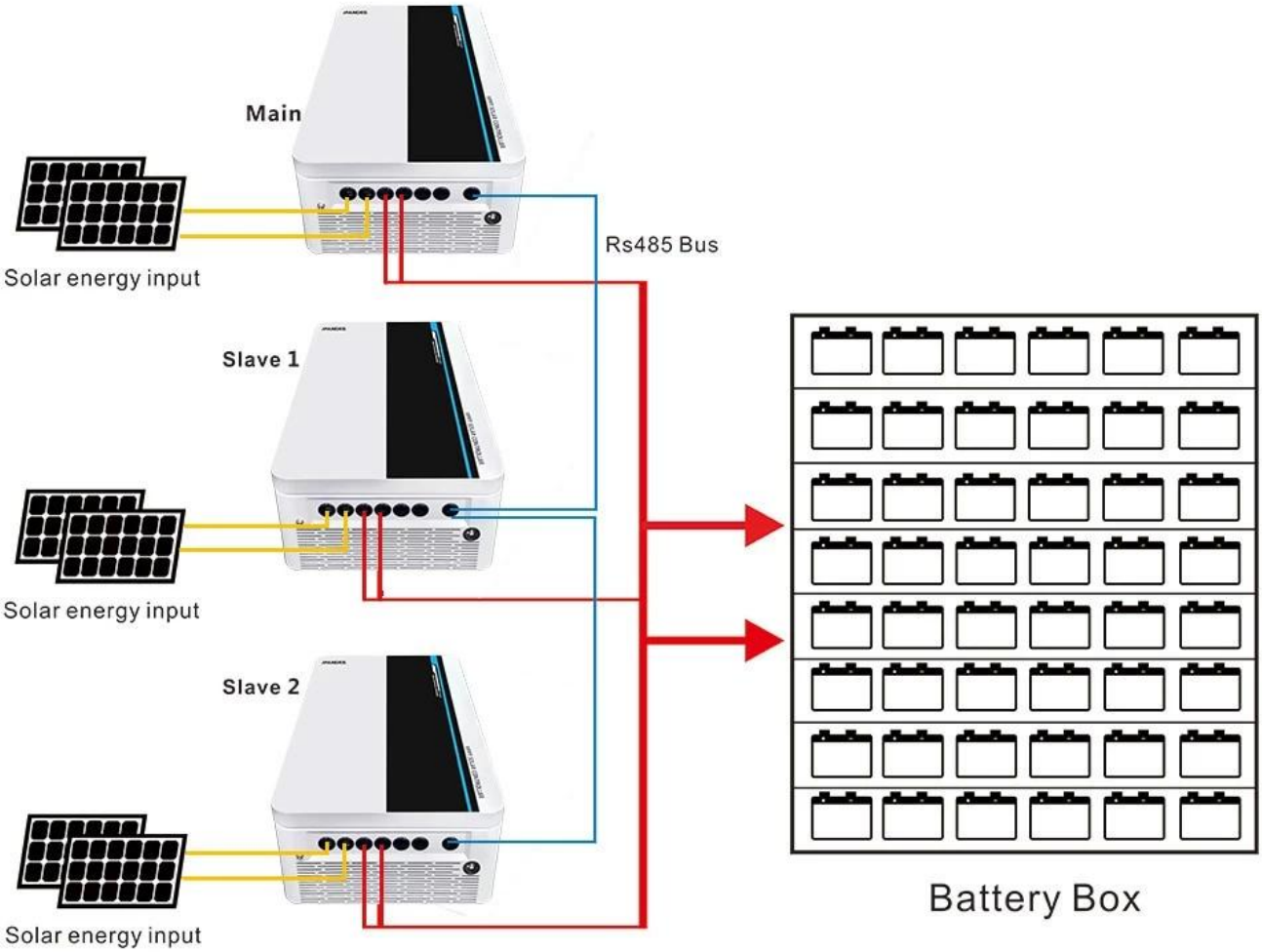

Remark: Above is company’s standard parameters, any modify please check our official website.