□□□

□□□□□□□□MPPT□□□□□□□□□□□□□□□□□□□□□□□□□□□□□□□□MPPT□□□□□□□□□□□□□□□□□□□□□□□□□□□□□□□□PV□□□□□□□□□□□□□□□□□□□

□□□□	□□□□□□□□□□□□□□□□□□□□□□□□□□□□□□□□□□□□□	□□□□□□□□□□□□□□□□□□□□

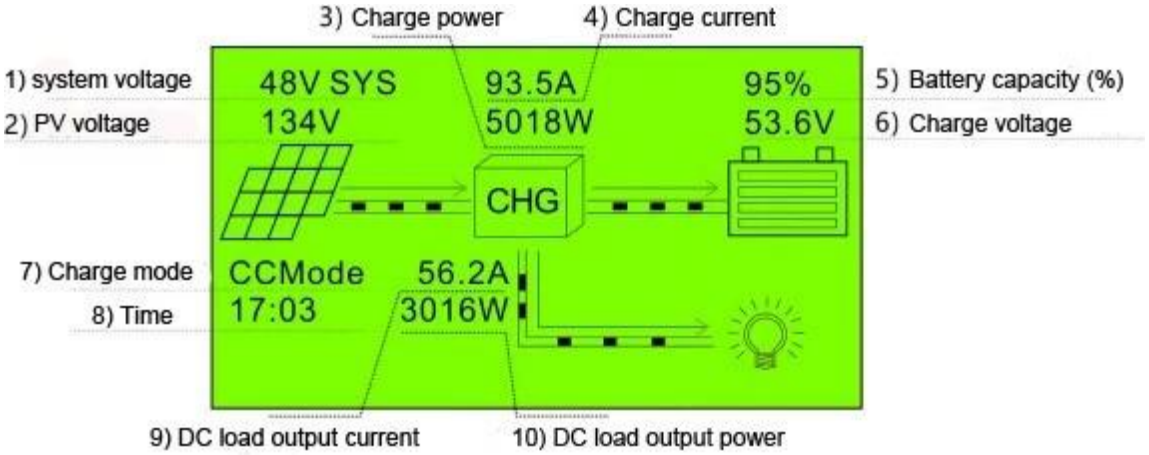
3) Charge power
4) Charge current
1) system voltage
2) PV voltage
48V SYS
134V
93.5A
5018W
95%
53.6V
5) Battery capacity (%)
6) Charge voltage
CHG
7) Charge mode
8) Time
CCMode
17:03
56.2A
3016W
9) DC load output current
10) DC load output power

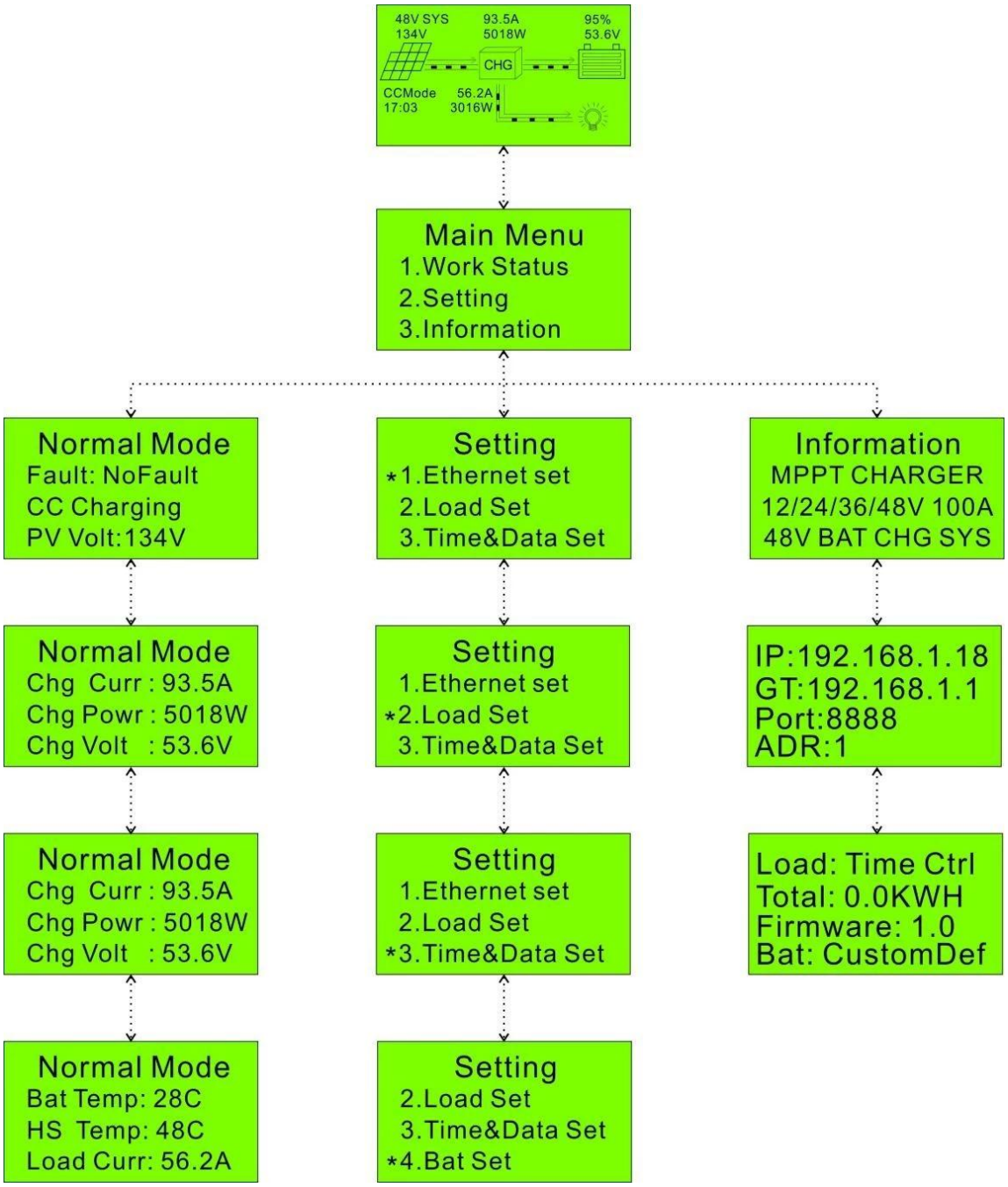
48V SYS
134V
93.5A
5018W
95%
53.6V
CHG
CCMode
17:03
56.2A
3016W
Main Menu
1.Work Status
2.Setting
3.Information
Normal Mode
Fault: NoFault
CC Charging
PV Volt:134V
Normal Mode
Chg Curr : 93.5A
Chg Powr : 5018W
Chg Volt : 53.6V
Normal Mode
Chg Curr : 93.5A
Chg Powr : 5018W
Chg Volt : 53.6V
Normal Mode
Bat Temp: 28C
HS Temp: 48C
Load Curr: 56.2A
Setting
*1.Ethernet set
2.Load Set
3.Time&Data Set
Setting
1.Ethernet set
*2.Load Set
3.Time&Data Set
Setting
1.Ethernet set
2.Load Set
*3.Time&Data Set
Setting
2.Load Set
3.Time&Data Set
*4.Bat Set
Information
MPPT CHARGER
12/24/36/48V 100A
48V BAT CHG SYS
IP:192.168.1.18
GT:192.168.1.1
Port:8888
ADR:1
Load: Time Ctrl
Total: 0.0KWH
Firmware: 1.0
Bat: CustomDef

□□□□□□

□□□□ □□□□□□

□□□□□□□□□□□□□□□□□□□□□□□□□□□□□□

□□□□□□□□□□□□□□□□□□□□□□□□□□□□□□□□

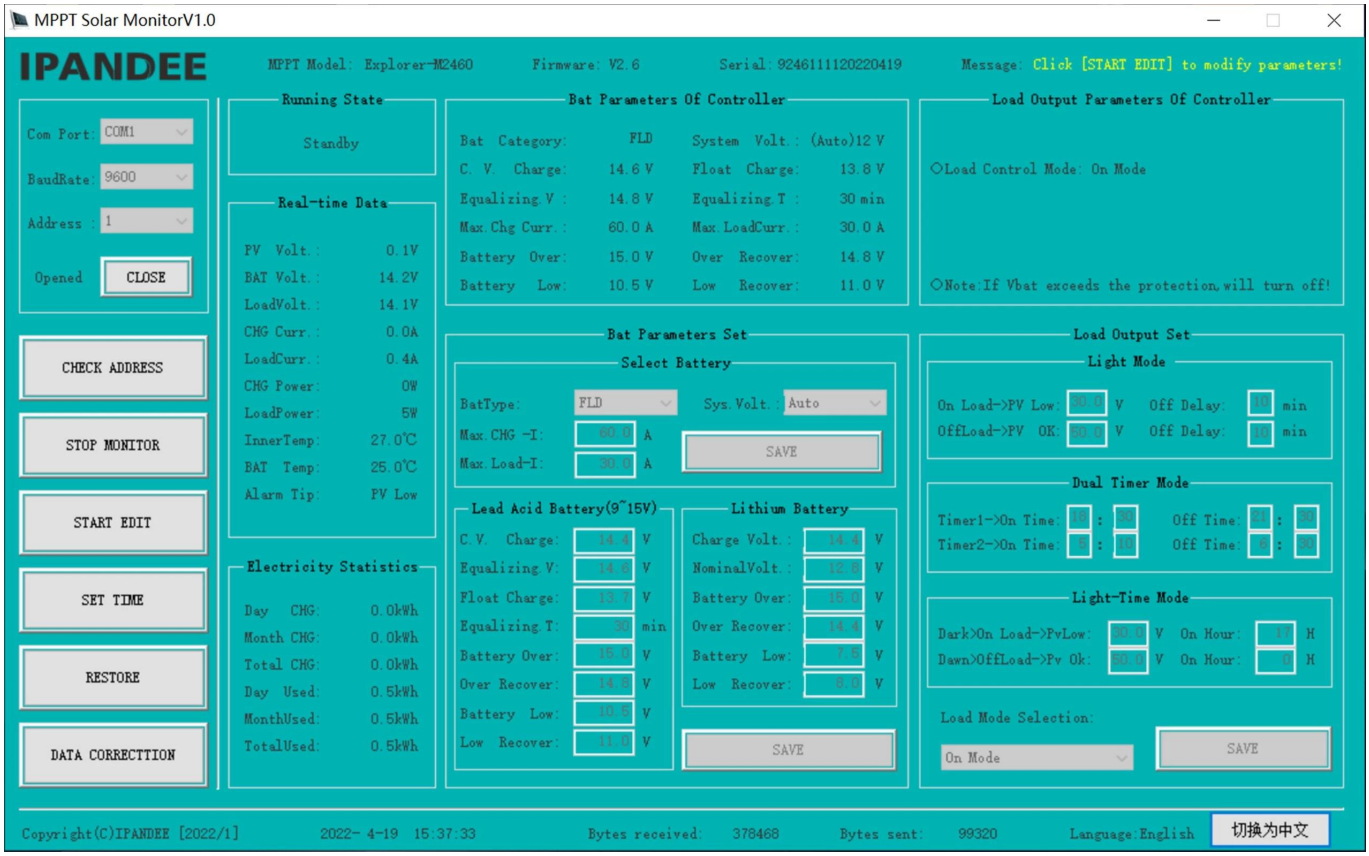
MPPT Solar MonitorV1.0
IPANDEE
MPPT Model: Explorer-M2460
Firmware: V2.6
Serial: 9246111120220419
Message: Click [START EDIT] to modify parameters!
Com Port: COM1
BaudRate: 9600
Address : 1
Opened
CLOSE
CHECK ADDRESS
STOP MONITOR
START EDIT
SET TIME
RESTORE
DATA CORRECTTION
Running State
Standby
Real-time Data
PV Volt.: 0.1V
BAT Volt.: 14.2V
LoadVolt.: 14.1V
CHG Curr.: 0.0A
LoadCurr.: 0.4A
CHG Power: 0W
LoadPower: 5W
InnerTemp: 27.0℃
BAT Temp: 25.0℃
Alarm Tip: PV Low
Electricity Statistics
Day CHG: 0.0kWh
Month CHG: 0.0kWh
Total CHG: 0.0kWh
Day Used: 0.5kWh
MonthUsed: 0.5kWh
TotalUsed: 0.5kWh
Bat Parameters Of Controller
Bat Category: FLD
System Volt.: (Auto)12 V
C. V. Charge: 14.6 V
Float Charge: 13.8 V
Equalizing.V : 14.8 V
Equalizing.T : 30 min
Max.Chg Curr.: 60.0 A
Max.LoadCurr.: 30.0 A
Battery Over: 15.0 V
Over Recover: 14.8 V
Battery Low: 10.5 V
Low Recover: 11.0 V
Load Output Parameters Of Controller
Load Control Mode: On Mode
Note:If Vbat exceeds the protection,will turn off!
Bat Parameters Set
Select Battery
BatType: FLD
Sys.Volt.: Auto
Max.CHG -I: 60.0 A
Max.Load-I: 30.0 A
SAVE
Lead Acid Battery(9~15V)
C.V. Charge: 14.4 V
Equalizing.V: 14.6 V
Float Charge: 13.7 V
Equalizing.T: 30 min
Battery Over: 15.0 V
Over Recover: 14.8 V
Battery Low: 10.5 V
Low Recover: 11.0 V
Lithium Battery
Charge Volt.: 14.4 V
NominalVolt.: 12.8 V
Battery Over: 15.0 V
Over Recover: 14.4 V
Battery Low: 7.5 V
Low Recover: 8.0 V
SAVE
Load Output Set
Light Mode
On Load->PV Low: 40.0 V Off Delay: 10 min
OffLoad->PV OK: 50.0 V Off Delay: 10 min
Dual Timer Mode
Timer1->On Time: 18 : 30 Off Time: 21 : 30
Timer2->On Time: 0 : 10 Off Time: 6 : 30
Light-Time Mode
Dark>On Load->PvLow: 30.0 V On Hour: 17 H
Dawn>OffLoad->Pv Ok: 50.0 V On Hour: 0 H
Load Mode Selection:
On Mode
SAVE
Copyright(C)IPANDEE [2022/1]
2022- 4-19 15:37:33
Bytes received: 378468
Bytes sent: 99320
Language:English
切换为中文

□□□□□□□□□□□□□□□□□□□□□□□□□□□□□□□□

□□□□□□□□□

□□□□□□□□□□□□□□□□□□□□□□□□□□□□□□□□

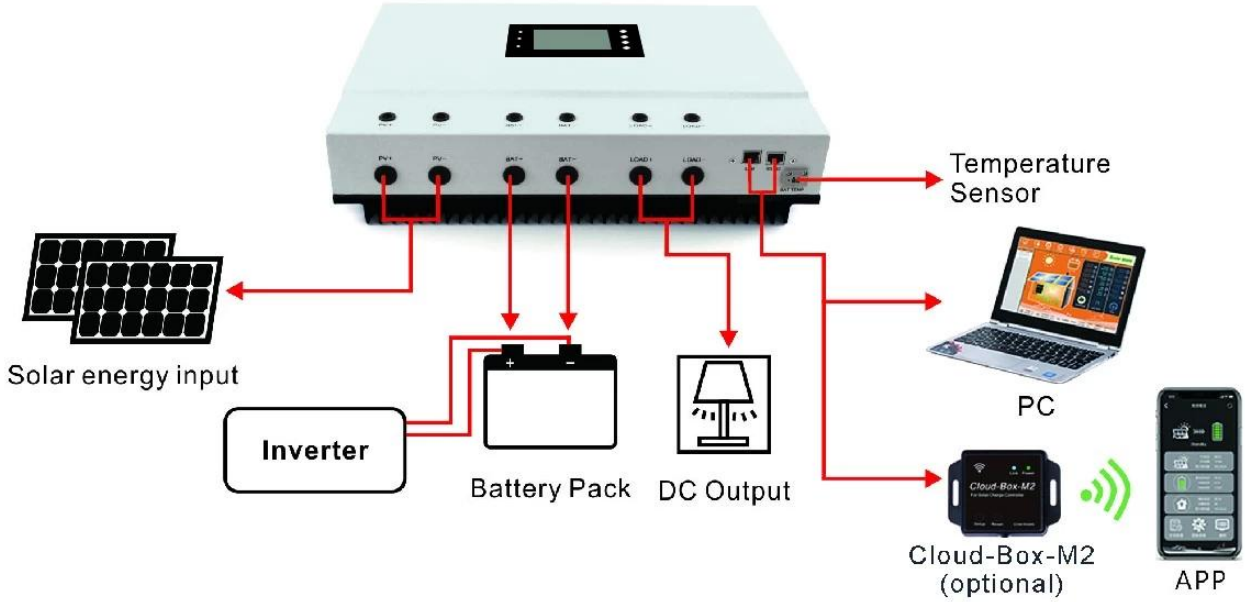
Temperature
Sensor
Solar energy input
Inverter
Battery Pack
DC Output
PC
Cloud-Box-M2
(optional)
APP

□□□□□□

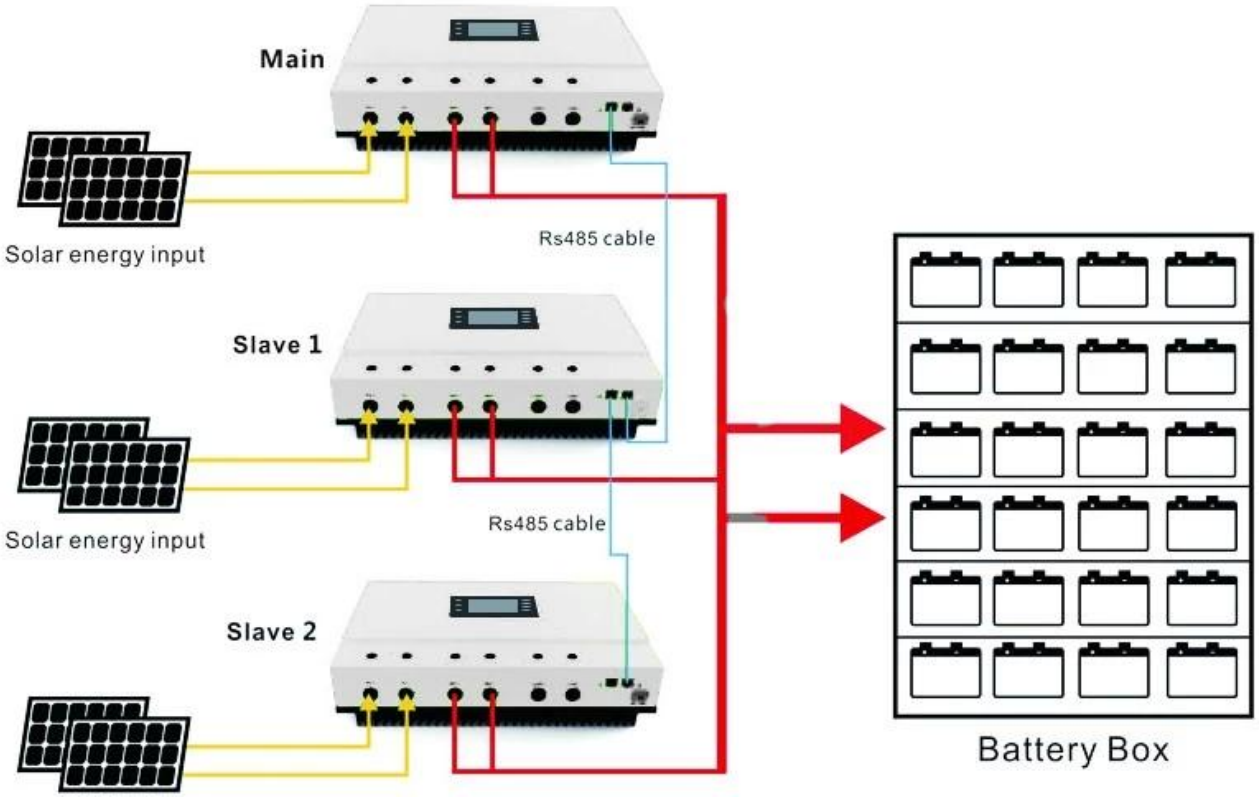
Main
Solar energy input
Rs485 cable
Slave 1
Solar energy input
Rs485 cable
Slave 2
Battery Box