□□□□□□□□

□□□1□□□□□□□□□□UPS□□□□□ □□□□□□□ □□□□□

□□□□□□□□□□□□□□□□2□□□□□□□□□□□□□□

3□□□□□□□□□□□□□□□□□□□□

3.1□□□□□□□□□□□□□□□□□□□□□□□□

3.2 AC□□□□□□□□□□□□□□□□□□□□□□□

3.3 DC□□□□□□□□□□□□□□□□□□□□□□

□□

1□□□□□□□□□□ □□□

2□CPU□□□□□□□□□□□□□□

3□LCD□□□□□□□□□□□□□□□□□□□□□□□□□□□□□□□

4□□□□□□□□□□□□□□□□□□□□□□□

5□□□□□□□□□□ □□□

6□□□□□□□□□□□□□□□□□□ □□ □□□□□□ □□□□□ □□□□□□ □ □□□ □□□□ □□□□□□□□□□□□□□□□□□□□□□□□□□□□

7□□□□□□□□□ □□□□□□□□□□□□ □□□□□□□□□□□□□□□□□□□ it□□5□□□□□□□□□□□□

8□□□□□□□□□□□□□□□ □□□□□□ □□□□□ □□□□□ □□□□□□□□□;□□□□□□

9□CE / EMC / LVD / RoHS□□□□□

10 2□□□□ □□□□□□□□□□□

□□

1□□□

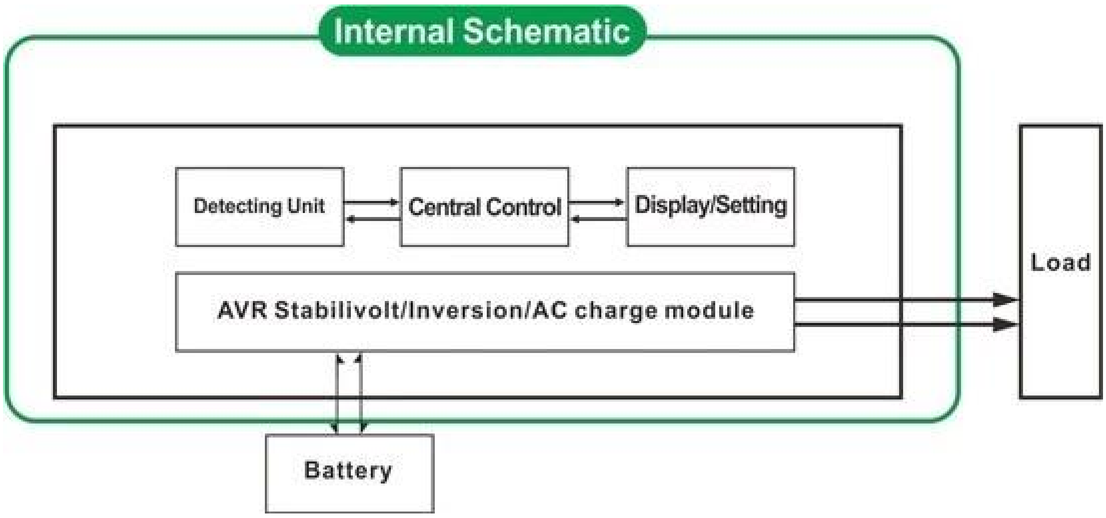

1.1[illegible]FREQUNCY[illegible]01[illegible]AC[illegible] [illegible] LCD[illegible]

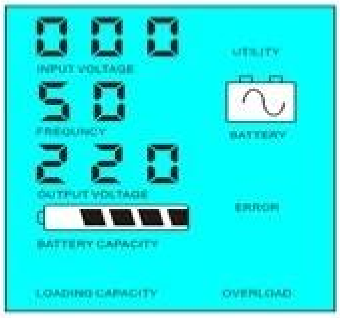

1.2[illegible]LCD[illegible]FREQUNCY[illegible]02[illegible]5[illegible] [illegible] [illegible]1-6W[illegible]5[illegible] [illegible]5[illegible]

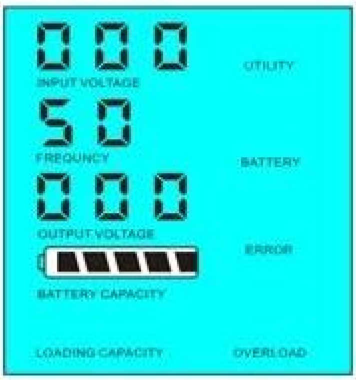

Load's power＜5% of inverter's rated power　　Load's power＞5% of inverter's rated power

2[illegible]UPS[illegible] [illegible]1[illegible] [illegible]

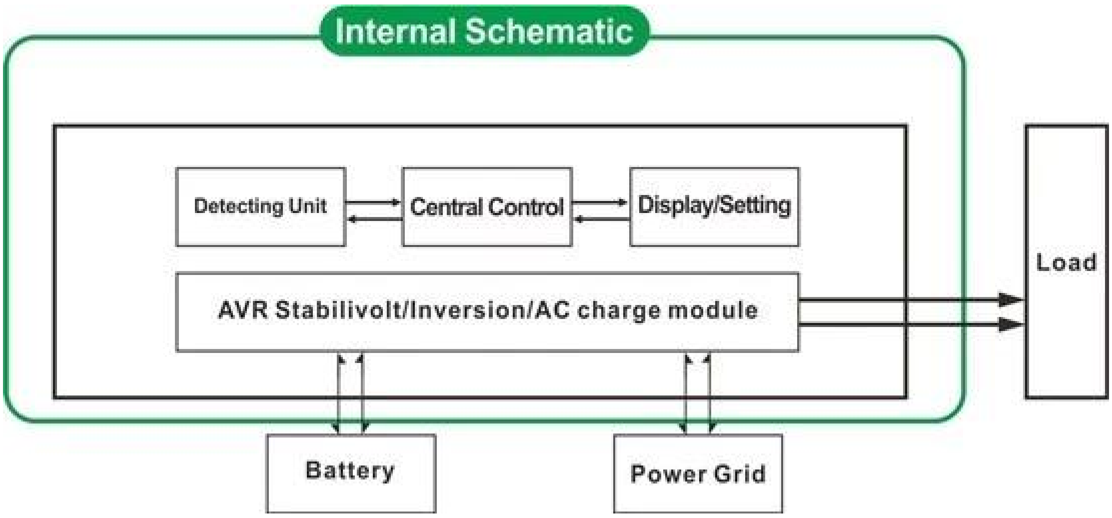

2.1□□□□□□□□□□□□□ □□□□□□□□□□UPS□□□□LCD□□□□□□□□□□FREQUENCY□01□□ □□ □□□□□□□□□□□□□□□□□□□□□□□□□□□□□□□

□□□□□□□□□□□

□□□□1□□□□□□□□□□□□□□ □□□□□□□□□□□□□□□□□□□□□□voltagebeing□□□□□□□□□□

□□□□2□□□□□□□□□□□□□□□ □□□□□□□□5ms□□□

□□□□3□□□□□□□□□□□□□□□□□ □□□

□□□□□□□□□□□□□□□□□□□□□□□

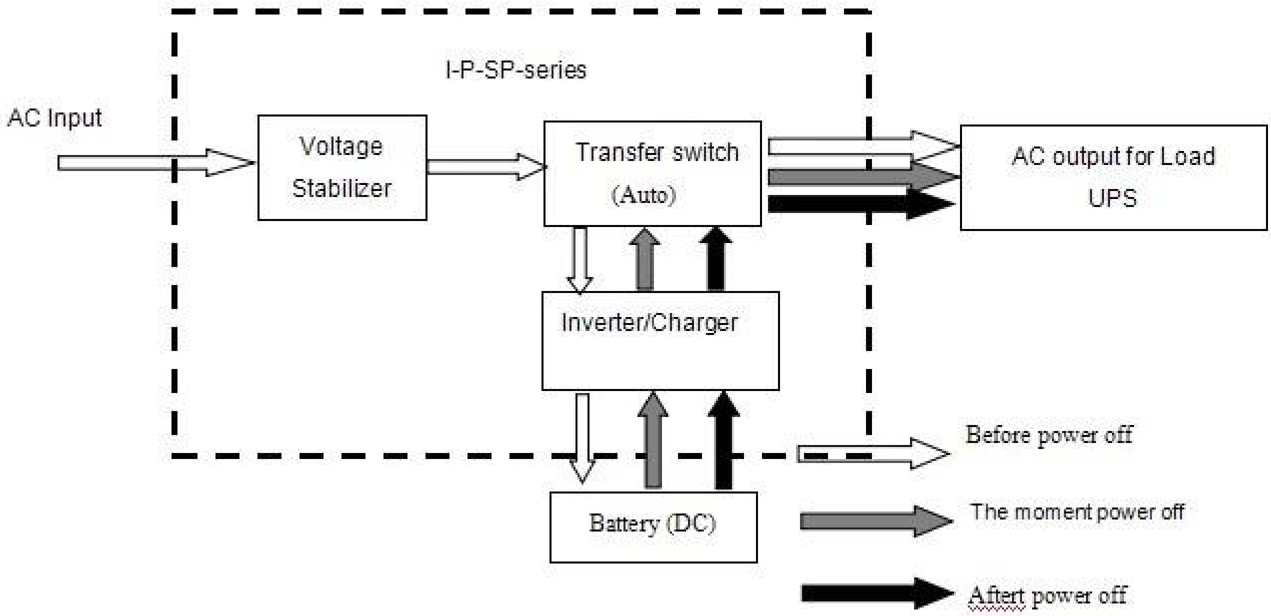

LCD□□□□□□□□□□□□□

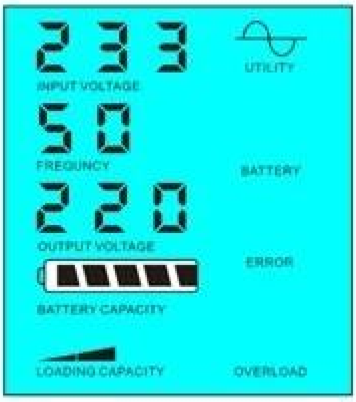

Utility supply power and charge battery

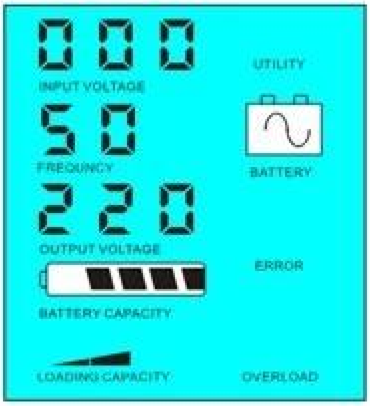

Without utility and battery supply power

□□□2.2□□□□□□ □□□□□□□□□□□□□UPS□□□□LCD□□□□□□□□□□□FREQUENCY□03□□ □□ □□□□□□□□□□□□□□□□□□□□□□□□□□□□□□□□□□□

□□□□□□□□□□□

□□□□1□□□□□□□□□□□□□□□□□□□□□ □□□□□□□□□□□□□□□□

□□□□2□□□□□□□□□□□□□□□□□□□□□□□□ □□

□□□□3□□□□□□□□□□□□□□□□□□□□□□□□□□□□□□□□□□□□□□□ □□□□□□□□□□□□□□□□□□□□□□□□□□□□□□□□□□□□□□

□□□□□□□□□□□□□□□□□□□□□□□□□□□

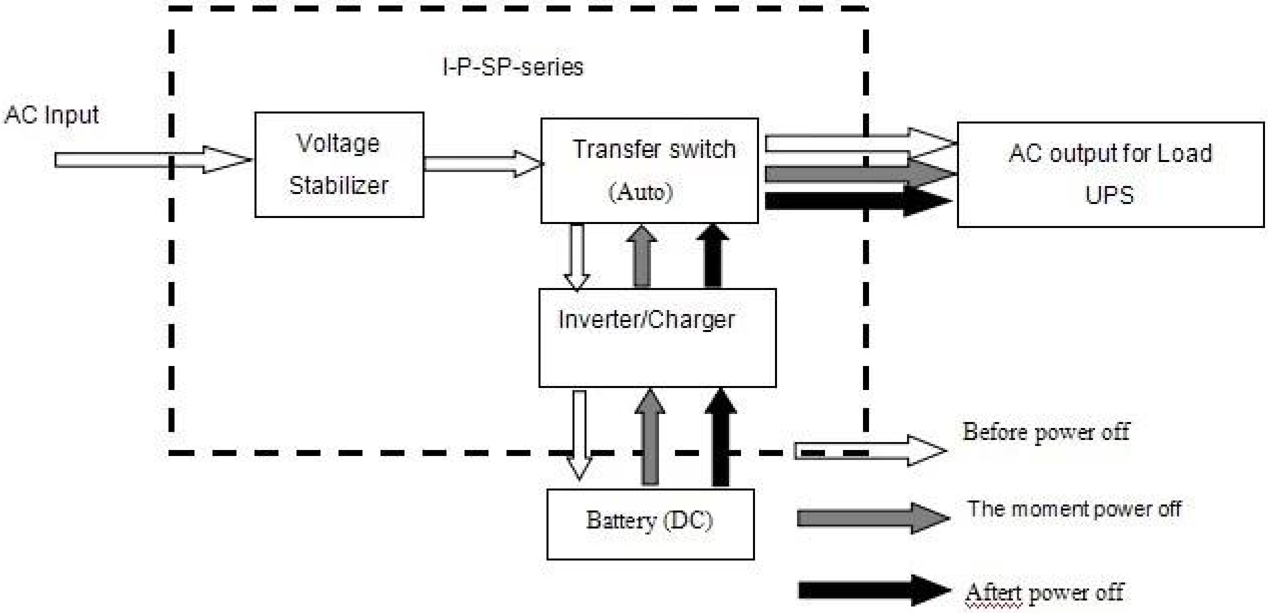

LCD□□□□□□□□□□□□□□□□

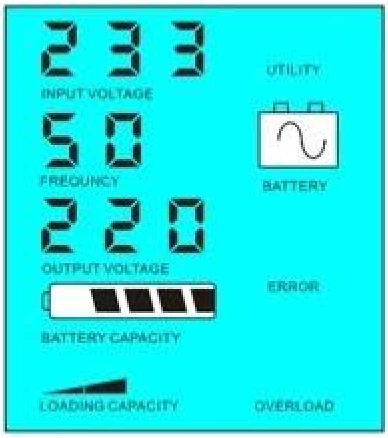

Battery has power

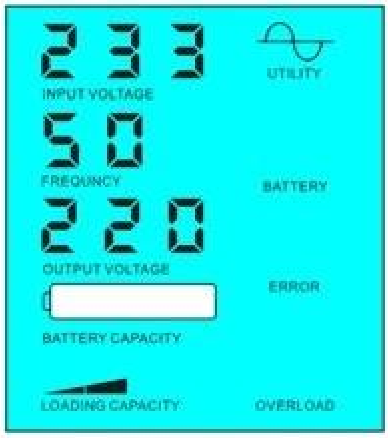

Battery dead, utility supply power

□□□□□□

Model □□□□□		1500VA
□□□□□□		1000W
□□□□□		2000W
□□□□□□□□DC□		24V
□□□W×D×H□mm□□		335 * 165 * 375
□□□□□W×D×H□mm□□		355 * 185 * 395
□□□□□kg□		14
□□□□kg□		16
□□□□□		
□□□□□□□□□	1	□□□□□□□□□□□□□□□ □□□□□
	2	□□□□□□□□□□□□□□□□□□□□□□ □□□□□5□□□□□□□□□□□□□□□□□
	3	□□□□□□□□□□□□□□□ □□□□□
AC□□	□□	220V□□□□□□□35□110V 35□□□□□□±
	□□□	50Hz□±3□□□□60Hz±3□□□□□□□□
AC□□	□□	220V±3□□□□230V±3□ 240V±3□□□□100V±3□
		□□□110V□□□□□□□±3□
	□□□	50Hz□±0.5□□□60Hz±0.5 □□□□□□□
□□	AC□□□□	0□15A
	□□□□	□□□□□□□□□□□ □□
	□□□□□□	□□□□□ □□□□□□□□□□□□□□□□□□□□□□
□□□□□□	□□□□□	□□□□□□□□
	□□□□	□□□□□□□□□□□□ □□□□□□□□□ □□□□□□□□□□□□ □□
□□□□□□□		□□□□□□□□□□□□ □□□≤3
□□□□□		> 120□1□□> 130□□10S
□□□□	□□□□□□□	1□6W
	□□□□□	1□3A
□□□□		80□□□□□□90□□□□□
□□□□		<5ms□□AC□DC / DC□□AC□□
□□		□□□□□□□□□□□□ □□□□□□□□□ □□□□□
□□	□□	-10℃□50℃
	□□	10□□□□□□90□□□□□
	□□	≤4000□□□□

□□

□□□□□□□□□□□□□□□□□□□□□□□□□□□□□□□□□

[illegible]

[illegible]R[illegible]D[illegible]OEM[illegible]

[illegible]

[illegible] [illegible] [illegible] [illegible]