□□□□

I-P-TPI2-1000W-6000W □□□□□

1.1□□□□□□□□□ON□□□□□□□□□□□□□□□□□□□□AC□□□□□□□□□
□□□□□□□□□□□□□□□□□□□□□□□□□□□□□□LCD□□□□□□□□□□□□□□□□□□□

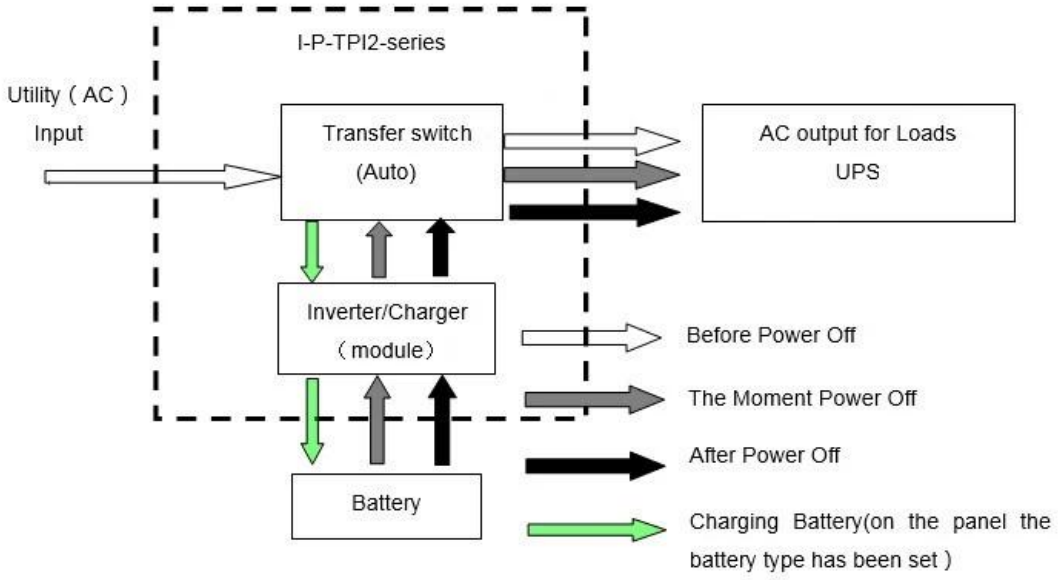
I-P-TPI2-series
Utility (AC)
Input
Transfer switch
(Auto)
AC output for Loads
UPS
Inverter/Charger
（module）
Battery
Before Power Off
The Moment Power Off
After Power Off
Charging Battery(on the panel the battery type has been set)

3.2□□□□□□□□□□□□□□□□□□□□□□□□□UPS□□□□□□□□□□□□□□□□DC□□□□□□□□□□

□□□□□□□□□□□□□□□□□□□□□0□□□□□□□□□□□□□□□□□□□

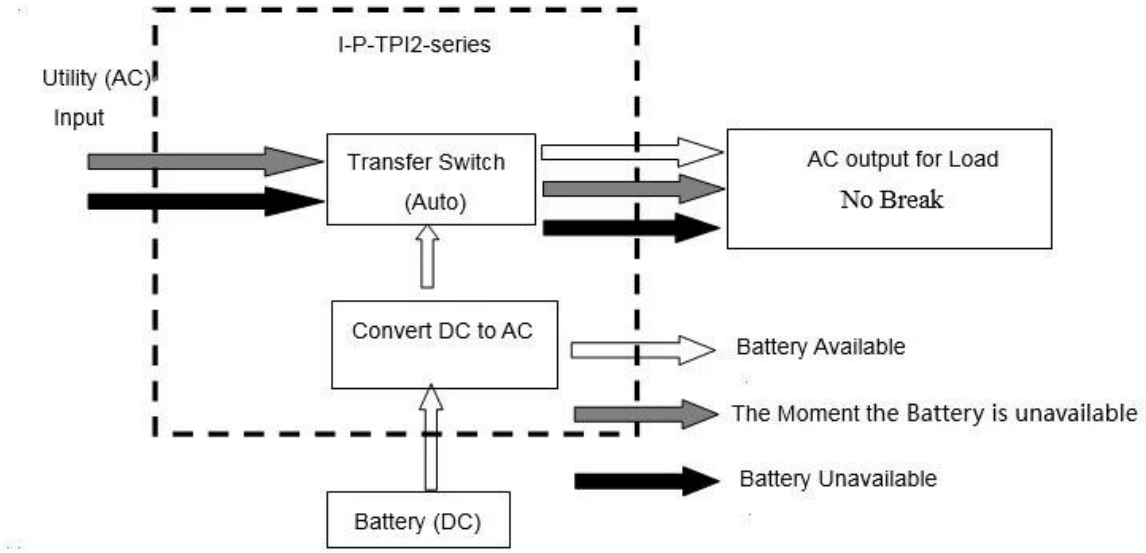
I-P-TPI2-series
Utility (AC)
Input
Transfer Switch
(Auto)
AC output for Load
No Break
Convert DC to AC
Battery Available
The Moment the Battery is unavailable
Battery Unavailable
Battery (DC)

□□□□□□