MASTER 100A MPPT□□□□□□□□□□□□□□12V 24V 36V 48V □□□□□□□□□□ 4800W

□□

1.□□□□MPPT□□□□□□□□MPPT□□≥99.5□□□□□□□□□□□□□98□□□□□□□□□□
2.arge□□□□3□□□□□□□□□□□□□□

□□□□	□□□□

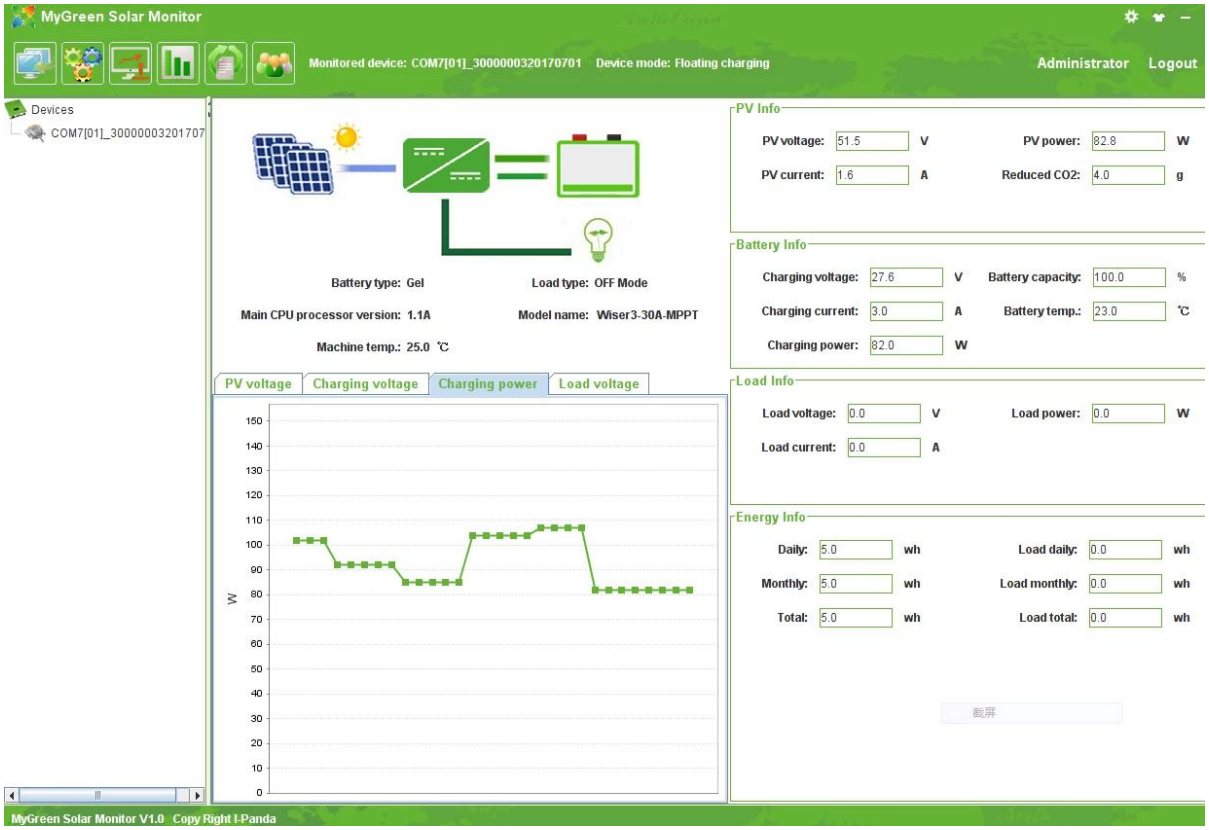
MyGreen Solar Monitor
Monitored device: COM7[01]_3000000320170701
Device mode: Floating charging
Administrator
Logout
Devices
COM7[01]_30000003201707
Battery type: Gel
Load type: OFF Mode
Main CPU processor version: 1.1A
Model name: Wiser3-30A-MPPT
Machine temp.: 25.0 ℃
PV voltage
Charging voltage
Charging power
Load voltage
W
PV Info
PV voltage: 51.5 V
PV power: 82.8 W
PV current: 1.6 A
Reduced CO2: 4.0 g
Battery Info
Charging voltage: 27.6 V
Battery capacity: 100.0 %
Charging current: 3.0 A
Battery temp.: 23.0 ℃
Charging power: 82.0 W
Load Info
Load voltage: 0.0 V
Load power: 0.0 W
Load current: 0.0 A
Energy Info
Daily: 5.0 wh
Load daily: 0.0 wh
Monthly: 5.0 wh
Load monthly: 0.0 wh
Total: 5.0 wh
Load total: 0.0 wh
MyGreen Solar Monitor V1.0 Copy Right I-Panda

□□□□□□□

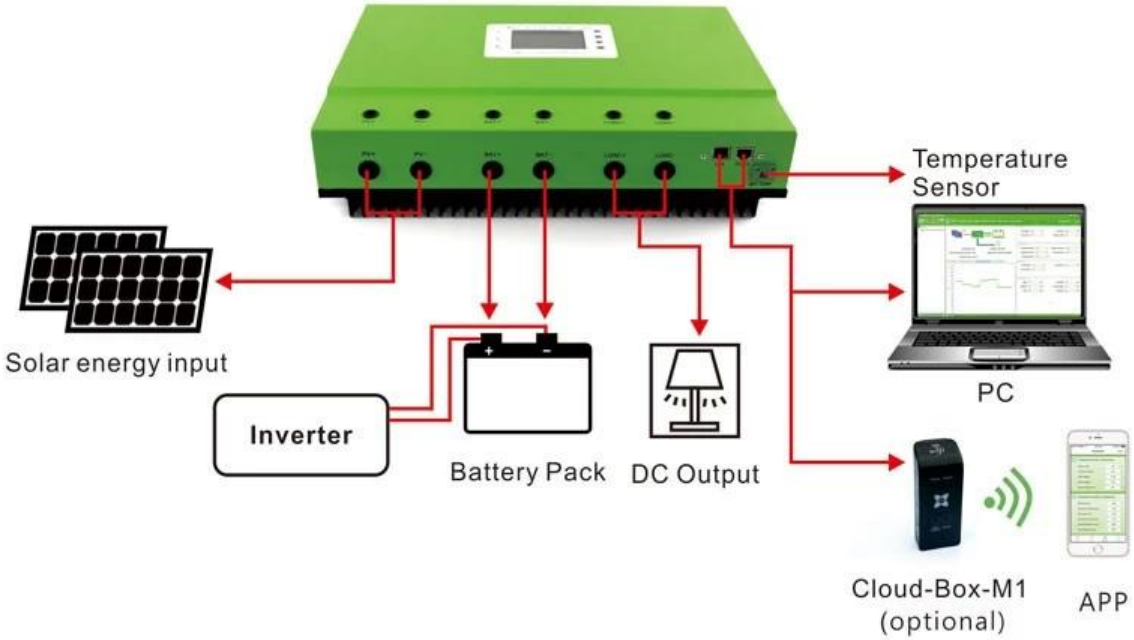
Temperature Sensor
Solar energy input
PC
Inverter
Battery Pack
DC Output
Cloud-Box-M1 (optional)
APP

□□□□□

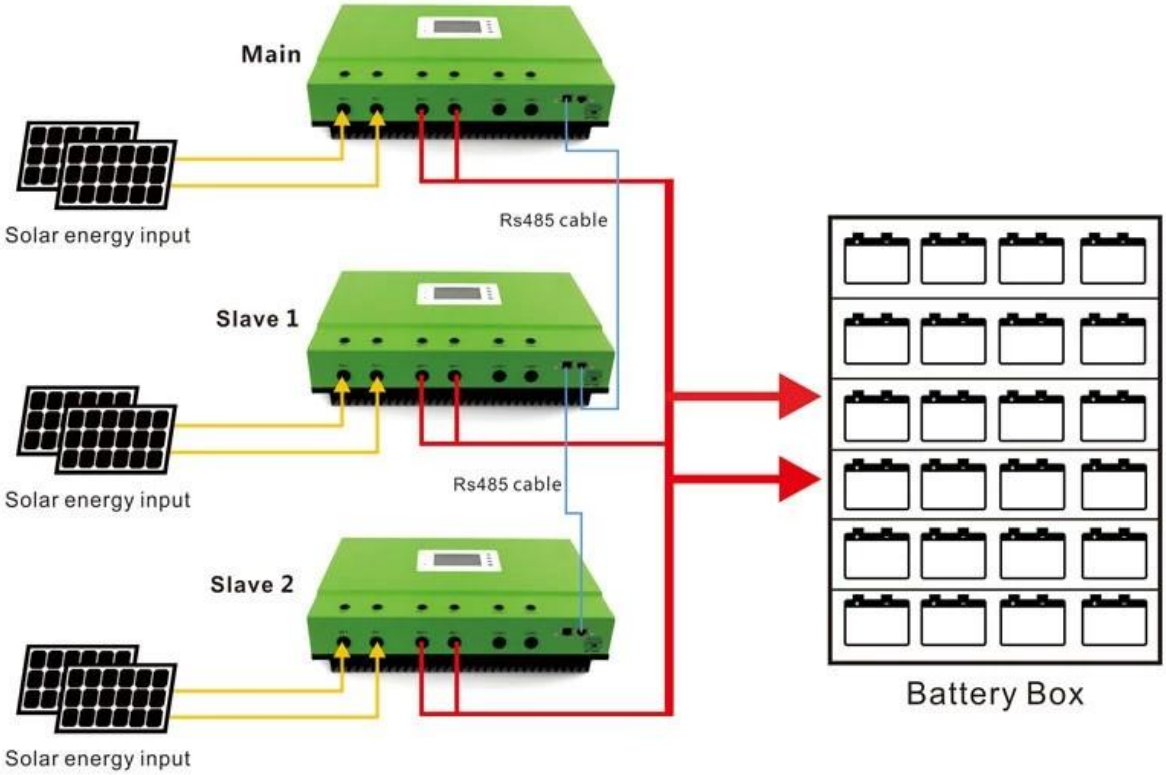

□□ MPPT□□□□□□□□ □□□10□□2016□SNEC□□□10TOP□□□□□□□□□