□□□□□□□□□□□□□□IP-TPI2-1000W-6000W□□□□□□□□□□□□□□□□□□□□□□□□
□□□□□□□□□□□□□□□□□□□□□□□□□□□□□□□□□□□
□□□□□□□□□□□□□□□□□□□□□□ □□□□□□□□□□□□□□□□□□□□□□□□□□□□□□
AC□□□□□□□□□□□□□□□□□□□□□□□□□1□□□□□□□□DC□□□□□□□□□□□□□□□□□□□□□□□□
□□□□□50Hz□□□60Hz□□□□□□□□□□□□□TPI□□□□□□□□□□□□□□□□□□□□□□□□□□□□□
□□□□□□□□□□□□□□□□□□□□□□□□□□□□□□□UPS□□□□DC□24□□□□□□□□□□□□□□□□
□□□□□□□□□□□□□□□□□□□□□□□□□□□□□□□□□□□□□□□□□□□□□□□□□□□
□□□□□□□□□□□□□□□□□□□□□□□□□□□□□□□

## □□□□□□□□

□□□□□□□□□□□□□□□□□□□□
□□AC□□□□
□□□□□□□□□□□
□□□□□□□□□□□□□□□□□□

## □□

**1.DC / AC**□□□□

□□□□□□□□□□□□□□□□□□□□□□ON□□□□□□□□□□□□□□□□□□□□□□□□□□□□□□□□□□□□□□□□□□
S-ON□□□□□□□

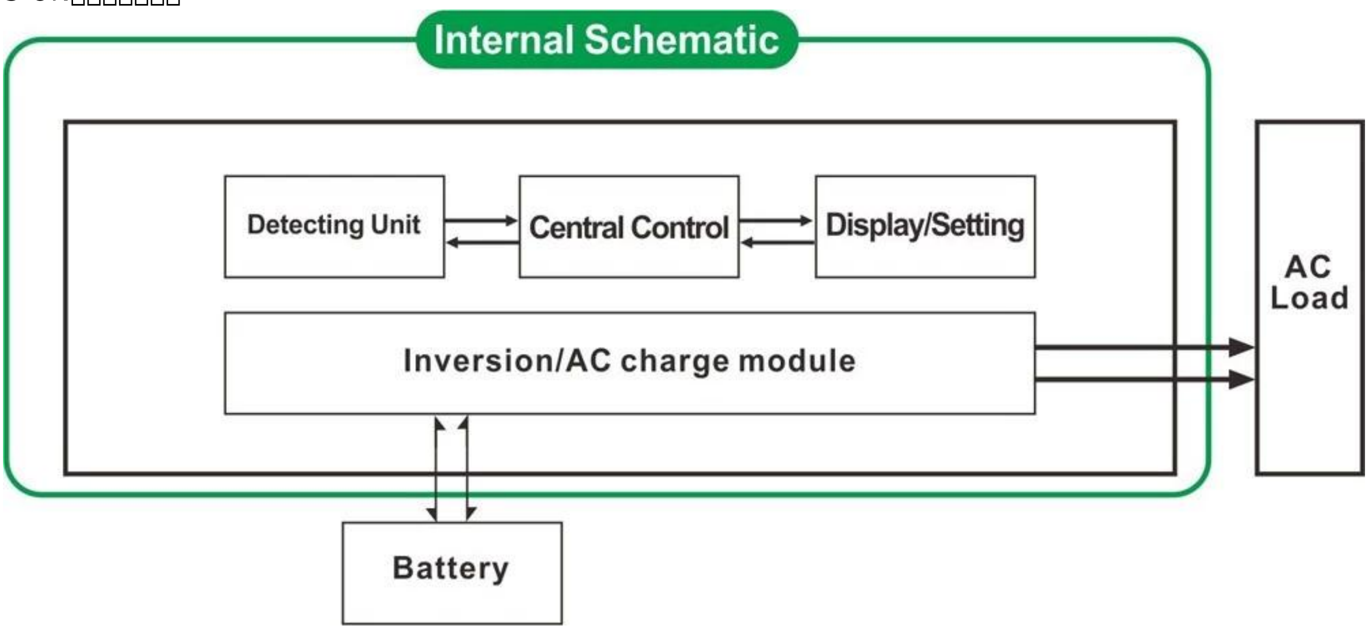


□ON□1.1□□□□□□□□□□□□□□□□□□AC□□□□□□□□□□□
□□□□□□□□□□□□□□□□□□□□□□□□□□□□LCD□□□□□□□□□□□□□□□□□
□□□□□□□□□□□□□□□□□□□□□□□□□□□□□□□
1.2□□□□□□□□S-ON□□□□□□□□□□□□□□□□□□□□□5□□□□□□□□
□□□□□□□□□□□□□□□□□□□□□□□□□□□□□□□□□□0□□□□□□□□□□□□□□□□□□□□□□□□□□□□·
□□□□□□□□□□□□□1-6W□□□□□□□□AC□□□□□□5□□□□□□□□
□□□□□□□□□□5□□□□□□□□□□□□□□□□□□□□□□□□□□□□□□□LCD□□□□□□□
□□□

**2**□□□□□□□□□□□□□□□□□□

1□□□□□□□□□□□□□□□□□□□□□□□□□□□□□8□□□□□□□□□□□□□□□
2□□□□□ □□□□□□ □□□□□□□□□□□□□□□□□□□□□
3□3□□□□□□□□□□□□□□□□CC□□□□□□□□□□CV□□
□□□□□□□□□CF□

□□□□□□□□□□0□□□□□□□□□□□□□□□□□□□□□□□□□□□0□□□□□□□
□□□□□□□□□□□□□□

**3 UPS□□□**

□□□□□□AC□□□□□□□□□□□□□□□□□□□□□□□□DC□□□□□□□□□□□□□□□□□□□□□□□□□□□□□□□□□□□□□□

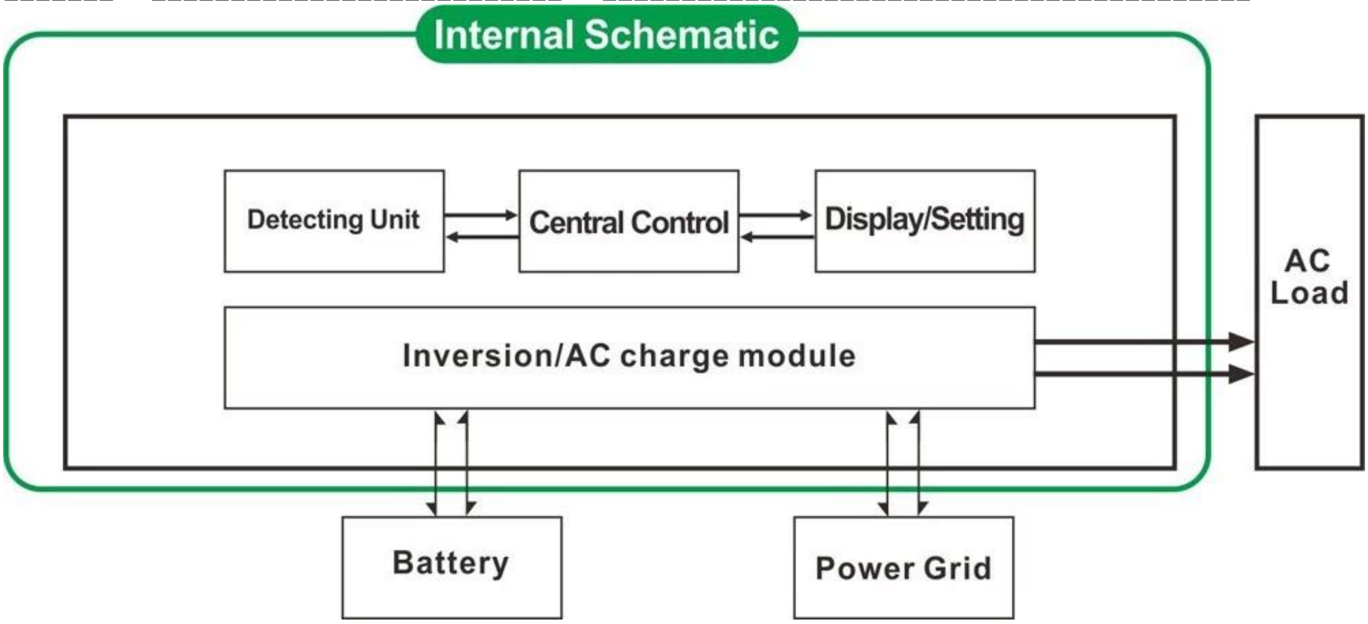


3.1□□□□□□□□□□□□□□□□□□□□□□UPS□□□□□□□□□□□□□□□□□□AC□□
3.2□□□□□□□□□□□□□□□□□□□□□UPS□□□□□□□□□□□DC□□□□□□□□□

**□□**

1□□□□□□□
2 CPU□□□□□□□□□□□□□□□□□□□
3 LCD□LED□□□□□□□□□□□□□□□□□□□□□□□□□□□□□□□□□
4□□□□□□□□□□□□□□□□□□□□□□□□□□□□□□□AC□DC□□□□□□□□□□□□□□□□□□
□□□□□50Hz□□□60Hz□□□□□□□□□□□□
5□□□□□□87□□98□□□□□□□□1W□6W□□□□□□□□□□□□□□□□□□
□□□□□□□□□□□□□□□□□
6□□□□□□□□□□□□□□□□□□□□□□□□□□□□□□□□□□□□8□□□□□□□□□□□□
□□□□□□□□□□□□□□□□□□□□□□□□□□□□□□□□□□□□□□□□□□□□□□□□□□□□□□□
7□□□□□□□□□□□□□□□□□□□
8□□□□□□□□□□□□□□□□□□□□□□□□□□□□□□□□□□□□□□□□3□□□□
□□□□□□□□□□1KW□□□□□2KW□□□□□2HP□□□□□□□□□□□□□1HP□□□□□□□□□□□□□□□□
□□□□□□□□3KW□3HP□□□□□□□□□□□□□□□□□□□
9□□□□□□□□□□□□□□□□□□□□□□□□□□□□□□□□□□□□□□□□□
□□□□□□□□□□□□□□□□□□□□□□□□□□□□□□□5□□□
10□□□□□□□□□□□□□□□□□□□□□□□□□□□□□
□□□□□□□□□□
11 EMC□LVD□RoHS□□□□□
12 2□□□□□□□□□□□□

□□

<table>
<tr><td colspan="2">□□□□□□□　□□□</td><td colspan="3">3000W</td></tr>
<tr><td colspan="2">□□□□□□</td><td colspan="3">3000W</td></tr>
<tr><td colspan="2">□□□□□</td><td colspan="3">9000W</td></tr>
<tr><td colspan="2">□□□□□□DC□</td><td colspan="3">12V□□□24V□□□48V□□□□□□</td></tr>
<tr><td colspan="2">□□□W×D×H□mm□□</td><td colspan="3">318 * 218 * 368</td></tr>
<tr><td colspan="2">□□□□□□□W×D×H□mm□□</td><td colspan="3">395 * 275 * 520</td></tr>
<tr><td colspan="2">□□□kg□</td><td colspan="3">30</td></tr>
<tr><td colspan="2">□□□□kg□</td><td colspan="3">32</td></tr>
<tr><td rowspan="3">□□□□□<br>□□□□</td><td>□□</td><td colspan="3">□□□□□□□□□</td></tr>
<tr><td>S-ON</td><td colspan="3">□□□□□□□□ 1□6□□□ □□□□□□□□□5□□□□□□□□□□□□□□□□□□□□□□□□□□□□<br>□□□□</td></tr>
<tr><td>□□</td><td colspan="3">□□□□□</td></tr>
<tr><td rowspan="2">AC□□</td><td>□□</td><td colspan="3">220V□□□□□□□35□□□□110V + 35□±</td></tr>
<tr><td>□□□</td><td colspan="3">50Hz□□□60Hz</td></tr>
<tr><td rowspan="2">AC□□</td><td>□□</td><td colspan="3">220V±3□□□□±230V 3□□□240V±3□□□□100V±3□<br>□□□110V□±3□□□□□□□</td></tr>
<tr><td>□□□</td><td colspan="3">□□□□□□□□□□□□□□□□□□□□□□□□<br>□□□50Hz□□□60Hz□□□□□□□□□ □DC / AC□□□□□</td></tr>
<tr><td rowspan="6">□□□□□□□□□□<br>□□□□□□□□□ "0" □AC□□<br>□□□□□□□□□□□□□□</td><td rowspan="2">AC□□□□<br>□MAX□</td><td>12V</td><td>24V</td><td>48V</td></tr>
<tr><td>75A</td><td>45A</td><td>30A</td></tr>
<tr><td>□□□□□□□□</td><td colspan="3">□□□□□ □□□□□□□□□□□□□1□□□□□□2□□□□□□□□□□□□□□□□□ □□□□□□□□□□<br>□□□□□□□□□□□□□□□□□□□□□□□□□□□ OEM□□□□□□</td></tr>
<tr><td>□□□□□</td><td colspan="3">□□□□□□□CC□CV□CF</td></tr>
<tr><td>□□□□</td><td colspan="3">□□□□□□□□□□□□□□□</td></tr>
<tr><td>□□□□□□</td><td colspan="3">□□□□□ □ □□□□□□□□□□□□□□□□□</td></tr>
<tr><td rowspan="2">UPS<br>□□□□</td><td>AC</td><td colspan="3">□□□□□□□□□□□□□□□□□□□□□□□□</td></tr>
<tr><td>DC</td><td colspan="3">□□□□□ □□□□□□□□□□□□□□□□</td></tr>
<tr><td rowspan="2">□□□□□□</td><td>□□□□□</td><td colspan="3">□□+□□LED</td></tr>
<tr><td>□□□□□</td><td colspan="3">□□□□□ □□□□□□□□□□□□□□□□□□□□□□□□□□□□□□□□□□□□□</td></tr>
<tr><td colspan="2">□□□□□□□</td><td colspan="3">□□□□□</td></tr>
<tr><td colspan="2">□□□□□</td><td colspan="3">> 120□□1□□> 130□□10S</td></tr>
<tr><td rowspan="2">□□□□</td><td>□□□□□□□</td><td colspan="3">1□6W</td></tr>
<tr><td>□□□□□</td><td colspan="3">1□3A</td></tr>
<tr><td colspan="2">□□□□</td><td colspan="3">87□□□□□98□</td></tr>
<tr><td colspan="2">□□□□</td><td colspan="3">□□DC / DC□□<5ms□□□□AC AC□</td></tr>
<tr><td colspan="2">□□</td><td colspan="3">□□□□□□ □□□□□ □□□□□□<br>□□□□ □□□□□□ □□</td></tr>
<tr><td rowspan="3">□□</td><td>□□</td><td colspan="3">-10℃□50℃</td></tr>
<tr><td>□□</td><td colspan="3">10□□90□</td></tr>
<tr><td>□□</td><td colspan="3">≤4000m</td></tr>
</table>

□□□

MS CERT

# Certificate Of Registration

## QUALITY MANAGEMENT SYSTEM

***This is to Certify that the Quality Management System***
***of***

***SHENZHEN I-PANDA NEW ENERGY TECHNOLOGY & SCIENCE CO., LTD.***

***Address:***
***Block H, Juyin Technology Industrial Park, Buji St., Longgang Dist., Shenzhen, 518000, Guangdong, China.***

*has been assessed and found to comply with the requirements of:*

# ISO 9001:2008

***(Quality Management System)***

***Clause 7 permissible Exclusions: Nil***

*Scope of Certification:*

***Design, Production and Sales of Power Inverter, Solar Controller, Solar Generator System and UPS.***

***Sector Code: (ANZSIC CODE: 2859 )***

***Certificate Number: CHIN/TW/QMS/00119***

*Issue no.: 01*

*Date of approval : 05.07.2014*
*Revision no: nil*

*Valid until : 04.07.2017*
*Revision date : nil*

*Original Certification Date: 05.07.2014*

May 2015

Surveillance Audit 1st Year

***Managing Director***

May 2016

Surveillance Audit 2nd year

## MS CERTIFICATION SERVICES PVT. LTD.

***www.mscertification.net***

*The Certificate is Valid Only if the Annual Surveillance Mark is Signed by Auditor on Original.*

MS CERT

# Certificate Of Registration

## ENVIRONMENTAL MANAGEMENT SYSTEM

***This is to certify that the Environmental Management System***

***of***

***SHENZHEN I-PANDA NEW ENERGY TECHNOLOGY & SCIENCE CO., LTD.***

***Address:***

***Block H, Juyin Technology Industrial Park, Buji St., Longgang Dist., Shenzhen, 518000, Guangdong, China.***

*has been assessed and found to comply with the requirements of:*

# ISO 14001:2004

***(Environmental Management System)***

*Scope of Certification:*

***Design, Production and Sales of Power Inverter, Solar Controller, Solar Generator System and UPS.***

***Sector Code: (ANZSIC CODE: 2859 )***

***Certificate Number: CHIN/TW/EMS/00028***

*Issue no.: 01*

*Date of approval : 05.07.2014*
*Revision no: nil*

*Valid until : 04.07.2017*
*Revision date : nil*

*Original Certification Date: 05.07.2014*

May 2015

Surveillance Audit 1st Year

***Managing Director***

May 2016

Surveillance Audit 2nd year

## MS CERTIFICATION SERVICES PVT. LTD.

***www.mscertification.net***

*The Certificate is Valid Only if the Annual Surveillance Mark is Signed by Auditor on Original.*

Best Service of Testing
since2003

# Certificate of Compliance

**Certificate NO. :** **BST14050326Y-1EC-1**

| | | |
|---|---|---|
| **Applicant** | : | **SHENZHEN I-PANDA NEW ENERGY TECHNOLOGY & SCIENCE CO., LTD.**<br>Bolck H, Juyin Technology Industrial Park, Buji St., Longgang Dist., Shenzhen, Guangdong, China |
| **Manufacturer** | : | **SHENZHEN I-PANDA NEW ENERGY TECHNOLOGY & SCIENCE CO., LTD.**<br>Bolck H, Juyin Technology Industrial Park, Buji St., Longgang Dist., Shenzhen, Guangdong, China |
| **Product Name** | : | **PURE SINE WAVE INVERTER WITH CHARGER AND UPS** |
| **Trade Name** | : | **I-PANDA** |
| **Main Test Model** | : | **I-P-TPI-6000W** |
| **Additional Model** | : | **I-P-TPI-1000W, I-P-TPI-2000W, I-P-TPI-3000W, I-P-TPI-4000W, I-P-TPI-5000W** |
| **Test Standard** | : | **EN 55022:2010**<br>**EN 61000-3-2:2006+A1:2009+A2:2009**<br>**EN 61000-3-3:2013**<br>**EN 55024:2010** |
| **As shown in the Test Report No.** | : | **BST14050326Y-1ER-1.** |

The EUT described above has been tested by us with the listed standards and found in compliance with the council EMC directive 2004/108/EC. It is possible to use CE marking to demonstrate the compliance with this EMC Directive.
The certificate applies to the tested sample above mentioned only and shall not imply an assessment of the whole production.

CE

APPROVED

**Christina**
**Manager**
**May 20, 2014**

**Shenzhen BST Technology Co.,Ltd.**
Add: Building No.23-24, Zhiheng Industrial Park, Guankouer Road, Nantou,Nanshan District,Shenzhen,Guangdong,China
Certificate Search: http://www.bst-lab.com, Tel:400-882-9628, 8009990305, E-mail:christina@bst-lab.com

Best Service of Testing
since2003

# Certificate of Compliance

| | | |
|---|---|---|
| **Certificate NO.** | : | **BST14050326Y-1SC-2** |
| **Applicant** | : | **SHENZHEN I-PANDA NEW ENERGY TECHNOLOGY & SCIENCE CO., LTD.**<br>Bolck H, Juyin Technology Industrial Park, Buji St., Longgang Dist., Shenzhen, Guangdong, China |
| **Manufacturer** | : | **SHENZHEN I-PANDA NEW ENERGY TECHNOLOGY & SCIENCE CO., LTD.**<br>Bolck H, Juyin Technology Industrial Park, Buji St., Longgang Dist., Shenzhen, Guangdong, China |
| **Product Name** | : | **PURE SINE WAVE INVERTER WITH CHARGER AND UPS** |
| **Trade Name** | : | **I-PANDA** |
| **Main Test Model** | : | **I-P-TPI-6000W** |
| **Additional Model** | | **I-P-TPI-1000W, I-P-TPI-2000W, I-P-TPI-3000W, I-P-TPI-4000W, I-P-TPI-5000W** |
| **Test Standard** | : | **EN 60950-1:2006+A11:2009+A1:2010+A12:2011** |
| **As shown in the Test Report No.** | : | **BST14050326Y-1SR-2** |

The EUT described above has been tested by us with the listed standards and found in compliance with the council LVD directive 2006/95/EC. It is possible to use CE marking to demonstrate the compliance with this LVD Directive.

The certificate applies to the tested sample above mentioned only and shall not imply an assessment of the whole production.

SHEN BST TECHNOLOGY CO., LTD. APPROVED

**Christina**
**Manager**
**May , 25, 2014**

**Shenzhen BST Technology Co., Ltd.**
Add:Building No.23-24,Zhiheng Industrial Park,Guankouer Road,Nantou,Nanshan District,Shenzhen,Guangdong,China
Certificate Search: http://www.bst-lab.com, Tel: 400-882-9628, 8009990305, E-mail:christina@bst-lab.com

Best Service of Testing
since2003

# FCC VERIFICATION OF CONFORMITY

BST14050326Y-1EC-3

We herewith confirm the following designated product:

**Product Name: PURE SINE WAVE INVERTER WITH CHARGER AND UPS**
**Trade Name: I-PANDA**
**Main Test Model. : I-P-TPI-6000W**
**Additional Model: I-P-TPI-1000W, I-P-TPI-2000W, I-P-TPI-3000W, I-P-TPI-4000W, I-P-TPI-5000W**

(Product Identification)

has been tested and found in compliance with the requirements of 47 CFR PART 15 regulation & ANSI C63.4 for the evaluation of Class B of electromagnetic compatibility. It is only valid in connection with the test report number: BST14050326Y-1ER-3.

This device complies with Part 15 of the FCC rules,operation is subject to the following two conditions:

(1) this device may not cause harmful interference, and
(2) this device must accept any interference received, including interference that may cause undesired operation.

(Identification of regulations/standards)

This declaration is the responsibility of the manufacturer/importer

**SHENZHEN I-PANDA NEW ENERGY TECHNOLOGY & SCIENCE CO., LTD.**
**Bolck H, Juyin Technology Industrial Park, Buji St.,**
**Longgang Dist., Shenzhen, Guangdong, China**

(Name /Address)

**MANUFACTURER / IMPORTER**

**TEST LABORATORY**

This is the results of test that was carried out by Shenzhen BST. from the submitted type samples of the product is in conformity with the specification of the respective standards.
The certificate holder has the right to fix the FCC-mark on the product complying with the required rules.

APPROVED

Christina
Manager
May 20, 2014

Shenzhen BST Technology Co.,Ltd.
Add: Building No.23-24, Zhiheng Industrial Park, Guankouer Road, Nantou,Nanshan District,Shenzhen,Guangdong,China,
Certificate Search: http://www.bst-lab.com, Tel:400-882-9628, 8009990305, E-mail:christina@bst-lab.com

Best Service of Testing
since2003

# Certificate of Compliance

**Certificate NO. :** **BST14050326Y-1RC-4**

| | | |
|---|---|---|
| **Applicant** | : | **SHENZHEN I-PANDA NEW ENERGY TECHNOLOGY & SCIENCE CO., LTD.**<br>Bolck H, Juyin Technology Industrial Park, Buji St., Longgang Dist., Shenzhen, Guangdong, China |
| **Manufacturer** | : | **SHENZHEN I-PANDA NEW ENERGY TECHNOLOGY & SCIENCE CO., LTD.**<br>Bolck H, Juyin Technology Industrial Park, Buji St., Longgang Dist., Shenzhen, Guangdong, China |
| **Product Name** | : | **PURE SINE WAVE INVERTER WITH CHARGER AND UPS** |
| **Trade Name** | : | **I-PANDA** |
| **Main Test Model** | : | **I-P-TPI-6000W** |
| **Additional Model** | : | **I-P-TPI-1000W, I-P-TPI-2000W, I-P-TPI-3000W, I-P-TPI-4000W, I-P-TPI-5000W** |
| **Test Standard** | : | **EPA3050B:1996、EN1122B:2001、EPA3052:1996、EPA3060A:1996、EPA7196A:1992、EPA3540C:1996、EPA8270D:2007、IEC62321:2008** |
| **As shown in the Test Report No.** | : | **BST14050326Y-1RR-4.** |

The EUT described above has been consolidated by us and found in compliance with the council RoHS directive－2011/65/EU.

SHEN BST TECHNOLOGY CO.,LTD. APPROVED

**RoHS**

**Christina**
**Manager**
**May 20, 2014**

**Shenzhen BST Technology Co.,Ltd.**
Add: Building No.23-24, Zhiheng Industrial Park, Guankouer Road, Nantou,Nanshan District,Shenzhen,Guangdong,China
Certificate Search: http://www.bst-lab.com. Tel:400-882-9628, 8009990305, E-mail:christina@bst-lab.com

□□□□
1 OEM□□□ODM□□□□□□□□□□□□□
□□□□□□□□□□□□□□□□□□□□2□□□□□□□□□□□□□□□□□□□□
3□24□□□□□□□□□□□□□□□□□□□□□□□□□□

4[illegible]
[illegible]5[illegible]