I-P-SPC□□□□□□□□□□□□□□□□□□□□□□□□□□□□□10000W

□□□□□□□□□

1□□□□□□□□□□□□□□□□□□□

2□□□□□□□□□□□□□□□□□□□□□□□□□□

□□

1□□□□□□□□□□□□□□□□□□□

□□□□□□

□□□		15KVA
□□□ □□□□		10KW
□□□ □□□		20KW
□□□□□ □□□DC□		96V
PWM □□□□□□□□□□□□	□□	96V
	□□□	50A
	PV□□□□ □□□□	200V
□□□ W×D×H□mm□□		420 * 260 * 605
□□□□□ □□□W×D×H□mm□□		440 * 280 * 625
□□□ □□□kg□		85
□□□ □□□kg□		95
□□□□□		
□□□□□ □□□□□□□	1	□□□□□□□□□□□AC □□□□□□□□□□□□□□□□□□□
	2	□□□□□□□□□□□□□□□□□□□□□□□□□□□□□5□□□□□□□ □□□□□□□□□□□□□□□□□□□□

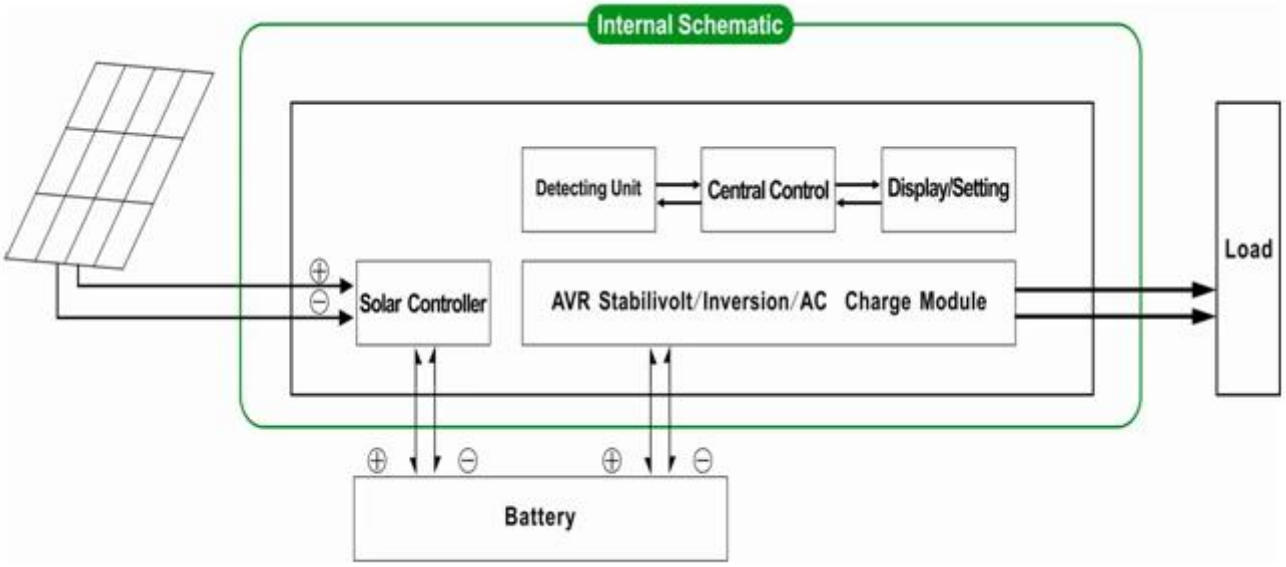
Internal Schematic
Detecting Unit
Central Control
Display/Setting
Load
Solar Controller
AVR Stabilivolt/Inversion/AC Charge Module
Battery

□□□□□□□□□□□□□□□□□□□□□□□□

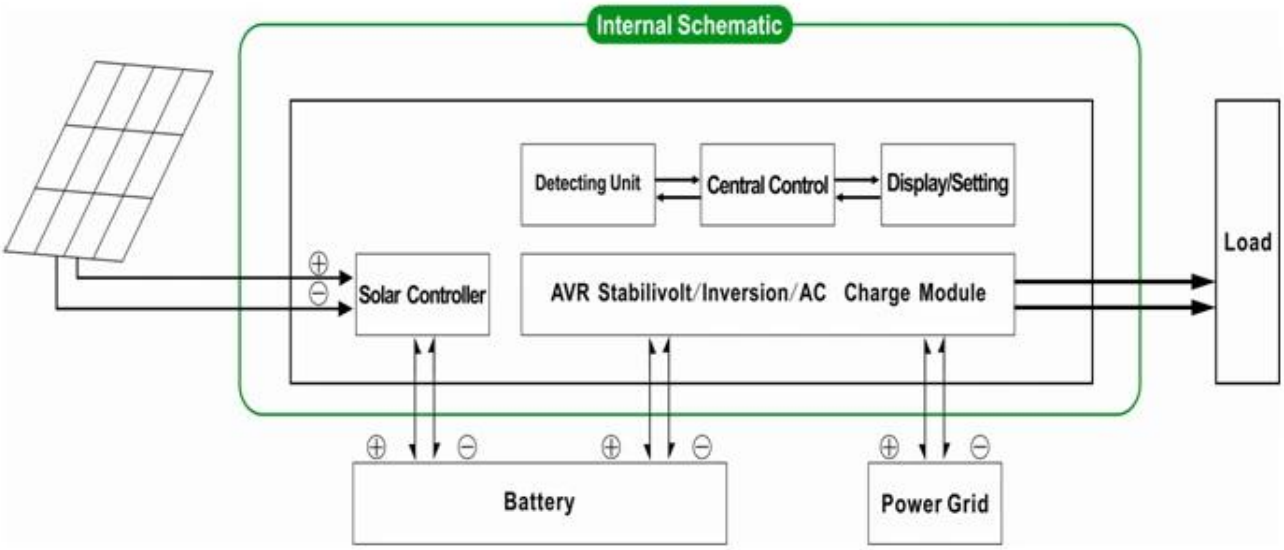
Internal Schematic
Detecting Unit
Central Control
Display/Setting
Load
Solar Controller
AVR Stabilivolt/Inversion/AC Charge Module
Battery
Power Grid

□□□□□□□□□□□□□□□□□□□

I-P-SPC-Series System

I-P-SPC-Series Inverter+Solar Controller