I-P-SPC[illegible] [illegible] [illegible][illegible] 1500W

[illegible]

1[illegible] [illegible] UPS[illegible]

2[illegible]PWM[illegible]

[illegible]

1[illegible]

2[illegible]

[illegible]

1[illegible]

2[illegible]CPU[illegible]

3[illegible]LED[illegible] LCD[illegible]

4[illegible] AVR UPS[illegible]AC[illegible]

5[illegible]

6[illegible] [illegible];[illegible]

7[illegible]5[illegible]

8[illegible]

9[illegible]CE / EMC / LVD / RoHS[illegible]/ FCC[illegible]

10[illegible]2[illegible]

[illegible]

[illegible]

1[illegible] [illegible]AC[illegible]

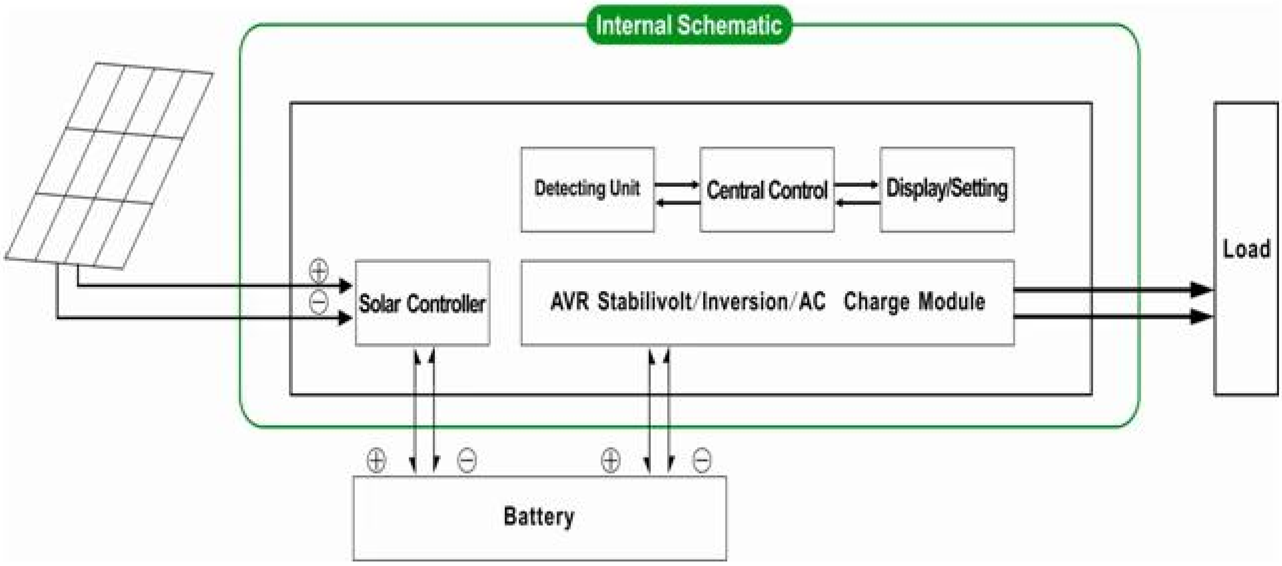

1.1[illegible]01[illegible]AC[illegible] [illegible]AC[illegible]LCD[illegible]

1.2 [illegible]FREQUNCY[illegible]02.If[illegible]AC[illegible]5[illegible]1-6W[illegible] LCD[illegible]0[illegible]5[illegible]DC[illegible]AC[illegible]5[illegible] LCD[illegible]

Load's power < 5% of inverter's rated power　　Load's power > 5% of inverter's rated power

[illegible]

1[illegible]

2[illegible]

□□□□□□□□□□□□□□□□□□□□□□

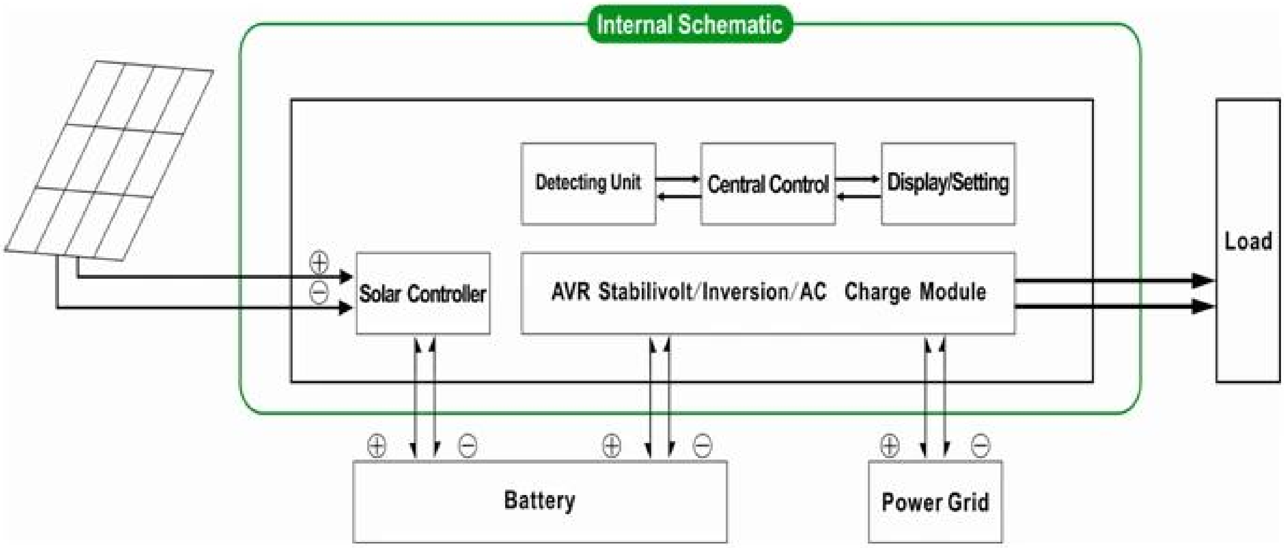

2 UPS□□ □□□AC□□□□□□□□□□□□□□□□□□□□□□1□□□□□□□□□□□□□□□□□DC□□□□□□□□□□□□□□□□□□

2.1.Utility□□□□AC□□□□□□□□□□□□□□□□□□□□□□□□□□□□□□□01□□□

□□□□□□□□□□□□□□□□□

□□□□1□□□

□□□□2□□□5ms□□□□□□

□□□□3□□□

□□□□□□□□□□□□□□□□□□□□□□

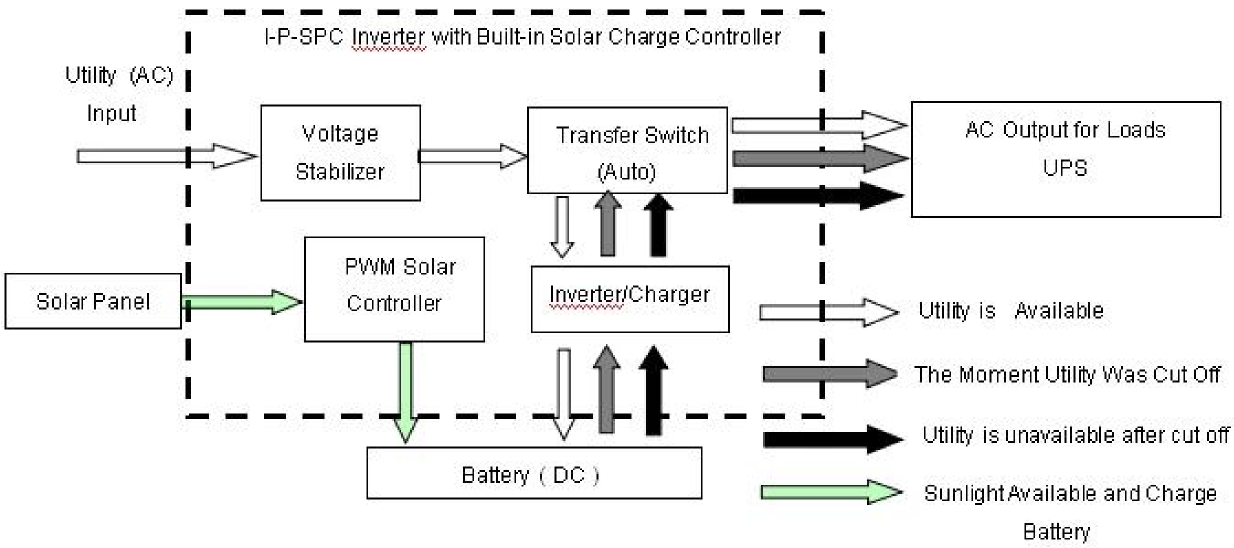

LCD□□□□□□□□□

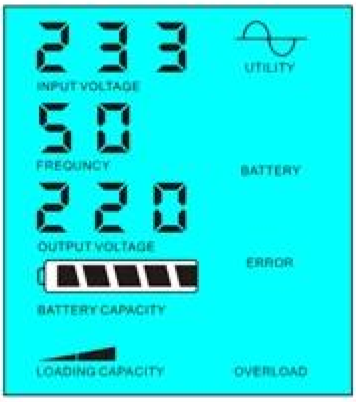

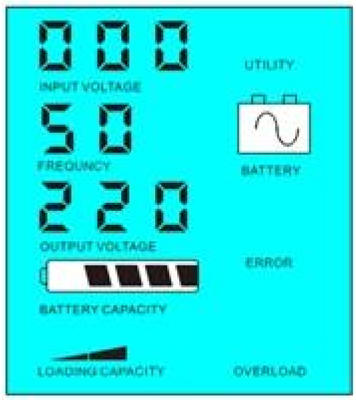

Utility supply power and charge battery   Without utility and battery supply power

□□□□□□□□□□□□

1□□□□□2□□□□□□□□□□□□□□□□□□□□□□□□□□□□□□□

2□□□

2.2□□□□□□□□□DC□□□□□□□□□□□□□□]□□□□□□□□□□□□□□□□□□03□□□□□□□□□□□□□□□□□□□□□□□□□□□□□□□□□□□□□ □□□

□□□□□□□□□□□□□□□□□

□□□□1□□□□□□□□□□□□□□□□□□AC□□□□□□□□□□□□□□□□□□□□□

□□2□□□

□□3□□

□□□□□□□□□□□□□□□□□□□□□□

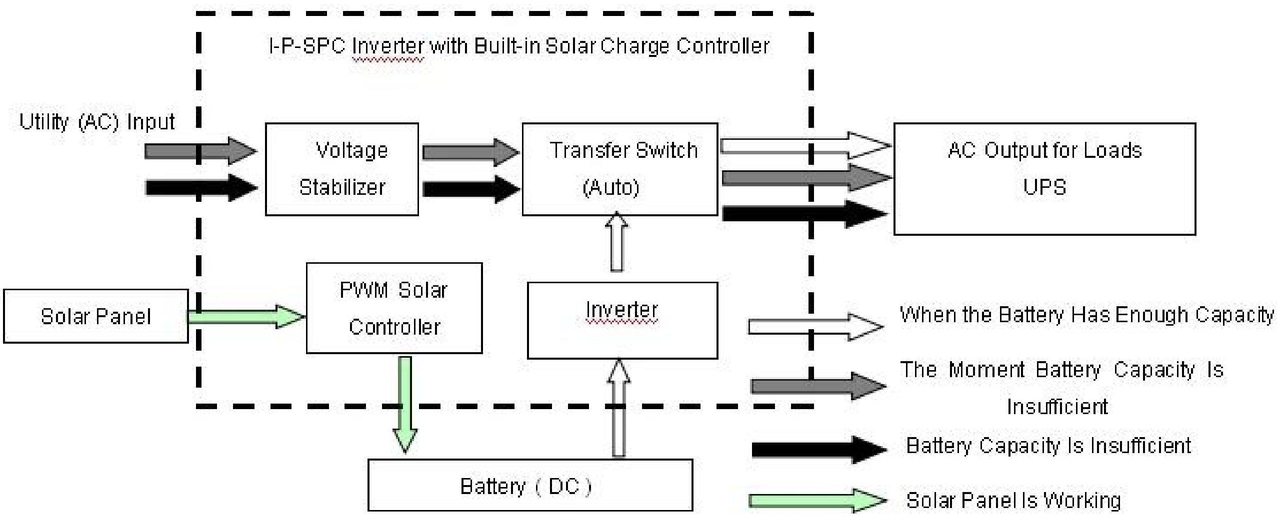

LCD□□□□□□□□□

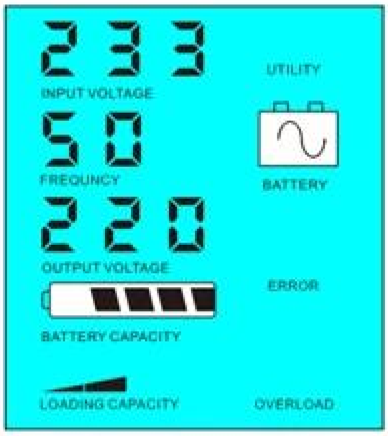

Battery available to supply power

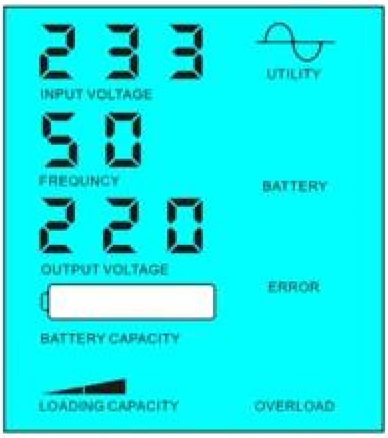

Battery unavailable,utility supply power

□□□□□□□□□□□□

1□□□□□□□□□□□□□□□□□□□□□□□□□□□□□□□□

2□□&□038;□□□□□□□□□&□038□□□bill.such

□□□□□□

□□□		2000VA
□□□ □□□□		1500W
□□□ □□□		3000W
□□□□□ □□□DC□		24V□□□48V
PWM □□□□□□□□□□□	□□	24V□□□48V
	□□□	30A
	PV□□□□ □□□□	24V□□□□□50V
		48V□□□□□100V
□□□ W×D×H□mm□□		350 * 220 * 460
□□□□□ □□□W×D×H□mm□□		370 * 240 * 480
□□□ □□□kg□		20
□□□ □□□kg□		22
□□□□□		
□□□□□ □□□□□□□	1	□□□□□□□□□□□AC □□□□□□□□□□□□□□□□□□
	2	□□□□□□□□□□□□□□□□□□□□□□□□□5□□□□□□□ □□□□□□□□□□□□□□□□□□□□□□□□□□□□
	3	□□□□□□□□□□DC □□□□□□□□□□□□□□□□□□□□
AC □□□□□□	□□	220V□□□□□□□35□□□□110V + 35□±
	□□□	3□□□□60Hz±3□±50Hz□□□□□□□□
AC □□	□□	220V±3□□□□230V±3 or240V±3□□□□100V±3□□□□110V±3□□□□□□□□
	□□□	0.5□□□60Hz±0.5±50Hz□ □□□□□□□
□□□□□□□□ □□	AC □□□□	0□15A
	□□ □□	□□□□□□□□□□□ □□
	□□□□□ □□	□□□□□□ □□□□□□□□□□□□□□□·□□□□□□
PV □□		PV□□□□□□□□□□□□□□□□□□□ PWM□□□□□□□□□□□□□□□□□□

□□□□□□	□□□□□□ □□□	□□+□□LED
	□□□□□□ □□	□□□□□□□□□□□□□ □□□□□□□□ □□□□□□□□□□□□□ □□
□□ □□□□□□□		□□□□□□□□□□□□□ □□□□□□□□THD≤3
□□□ □□		> 120□□1□□> 130□□10S
□□□ □□	□□□□ □□□	1□6W
	□□□□ □□□	1□3A
□□ □□		80□□90□
□□ □□		<5ms□□DC / DC□□AC□AC□
□□		□□□□□□□□□ □□□□□□□ □□□□□□
□□	□□	-10℃□50℃
	□□	10□□90□
	□□	≤4000m

□·□□□

□□□□□□□□□□□□□□□□□□□□□□□□□□□□□R&□□□□□□□□□□□□D□□□□□□□□□□□□□□□□□□□OEM□ODM□□□□□□□□

□·□□□□□□□□□□□□□□□□□□□□parameter.It□□□□□□□□□□□□□□□PWM□□□□□□□□□□□□□□□□□□□□□□□□

□□□□□□□□

□□□

□□□□□□□□□□□□□□□□□□□□□□□□□□□□□□□□□□□□□etc.Research□□□□□□□□□□ □□ 1ST2014□5□5□□□□..