□□□□

□□□□□□□□MPPT□□□□□□□□□□□□□□□□□□□□□□□□MPPT□□PV□□□□□□□□□□□□□□□□□□□

□□□□	□□□□□□□□□□□□□□□□□□□□□□	□□□□□□□□□□□□□□□□□□□□□□□□□□□□□□□□□□□□
	□□□□□□□	100A
	□□□□	3□□□□□□□□□□□□□□□□ - □□□ - □□□□
LOAD□□□	□□□□	□□□□□□□□
	□□□□□□□	100A
	□□□□□□□□	□□/□□□□□□□PV□□□□□□□□□□□□□□□□□□□□□□□□□□□PV +□□□□□□□□
□□□□□□□□□□□□□□□□□□□□

MPPT□□□□□

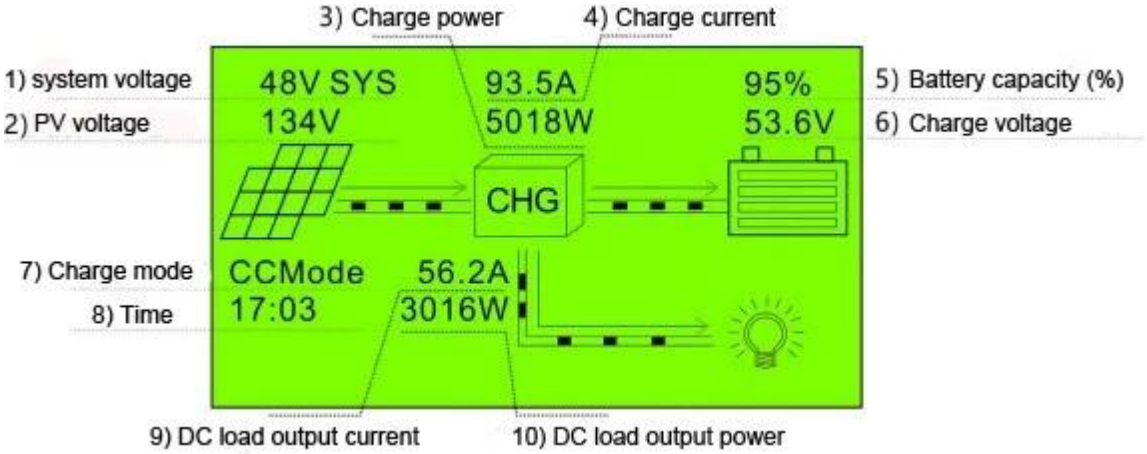
3) Charge power
4) Charge current
1) system voltage
48V SYS
93.5A
95%
5) Battery capacity (%)
2) PV voltage
134V
5018W
53.6V
6) Charge voltage
CHG
7) Charge mode
CCMode
56.2A
8) Time
17:03
3016W
9) DC load output current
10) DC load output power

48V SYS
134V
93.5A
5018W
95%
53.6V
CHG
CCMode
17:03
56.2A
3016W
Main Menu
1.Work Status
2.Setting
3.Information
Normal Mode
Fault: NoFault
CC Charging
PV Volt:134V
Normal Mode
Chg Curr : 93.5A
Chg Powr : 5018W
Chg Volt : 53.6V
Normal Mode
Chg Curr : 93.5A
Chg Powr : 5018W
Chg Volt : 53.6V
Normal Mode
Bat Temp: 28C
HS Temp: 48C
Load Curr: 56.2A
Setting
*1.Ethernet set
2.Load Set
3.Time&Data Set
Setting
1.Ethernet set
*2.Load Set
3.Time&Data Set
Setting
1.Ethernet set
2.Load Set
*3.Time&Data Set
Setting
2.Load Set
3.Time&Data Set
*4.Bat Set
Information
MPPT CHARGER
12/24/36/48V 100A
48V BAT CHG SYS
IP:192.168.1.18
GT:192.168.1.1
Port:8888
ADR:1
Load: Time Ctrl
Total: 0.0KWH
Firmware: 1.0
Bat: CustomDef

□□□□□□

□□□ □□□□□□□□□□□□□□□□□□Master□□□□□□□□□□□□□□□□□

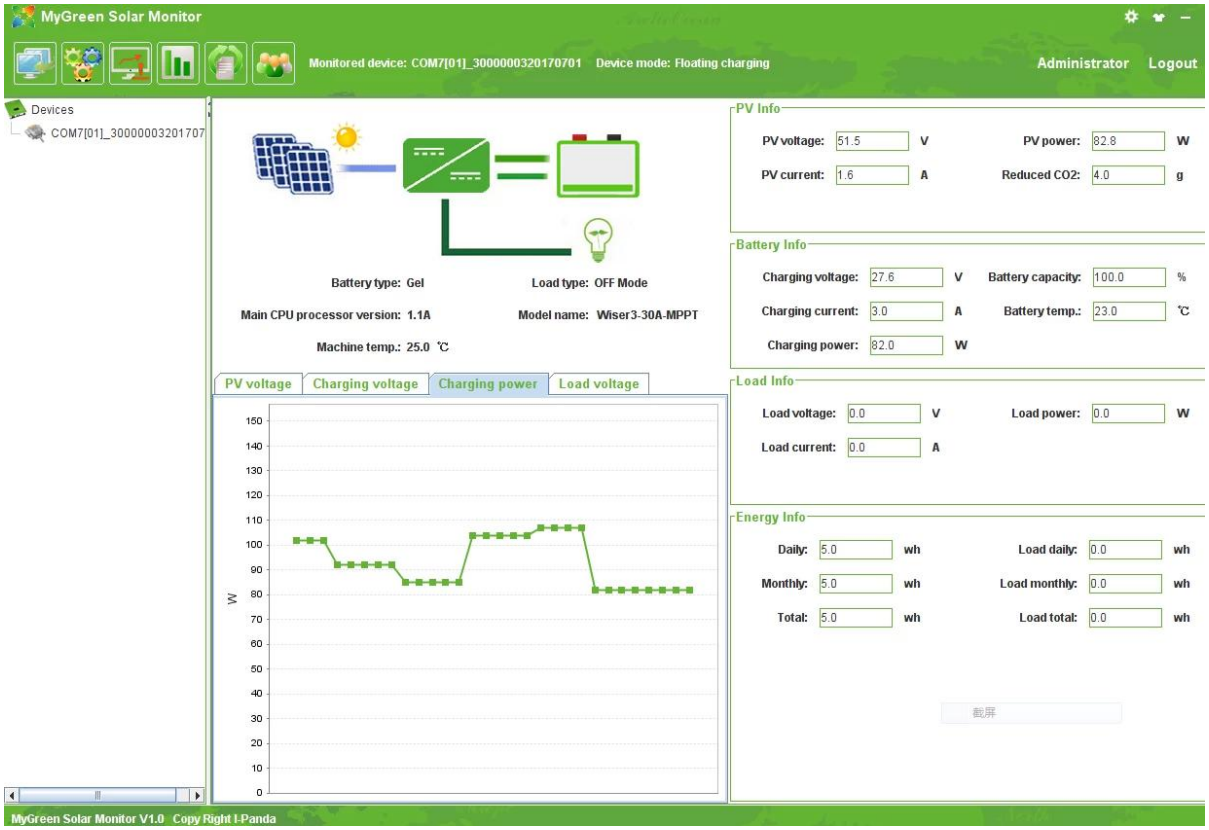
MyGreen Solar Monitor
Monitored device: COM7[01]_3000000320170701
Device mode: Floating charging
Administrator
Logout
Devices
COM7[01]_30000003201707
Battery type: Gel
Load type: OFF Mode
Main CPU processor version: 1.1A
Model name: Wiser3-30A-MPPT
Machine temp.: 25.0 ℃
PV voltage
Charging voltage
Charging power
Load voltage
W
PV Info
PV voltage: 51.5 V
PV power: 82.8 W
PV current: 1.6 A
Reduced CO2: 4.0 g
Battery Info
Charging voltage: 27.6 V
Battery capacity: 100.0 %
Charging current: 3.0 A
Battery temp.: 23.0 ℃
Charging power: 82.0 W
Load Info
Load voltage: 0.0 V
Load power: 0.0 W
Load current: 0.0 A
Energy Info
Daily: 5.0 wh
Load daily: 0.0 wh
Monthly: 5.0 wh
Load monthly: 0.0 wh
Total: 5.0 wh
Load total: 0.0 wh
MyGreen Solar Monitor V1.0 Copy Right I-Panda

□□□□□□□□□□□□□□□□□□□□□□□□□□□□□□

□□□□□□□

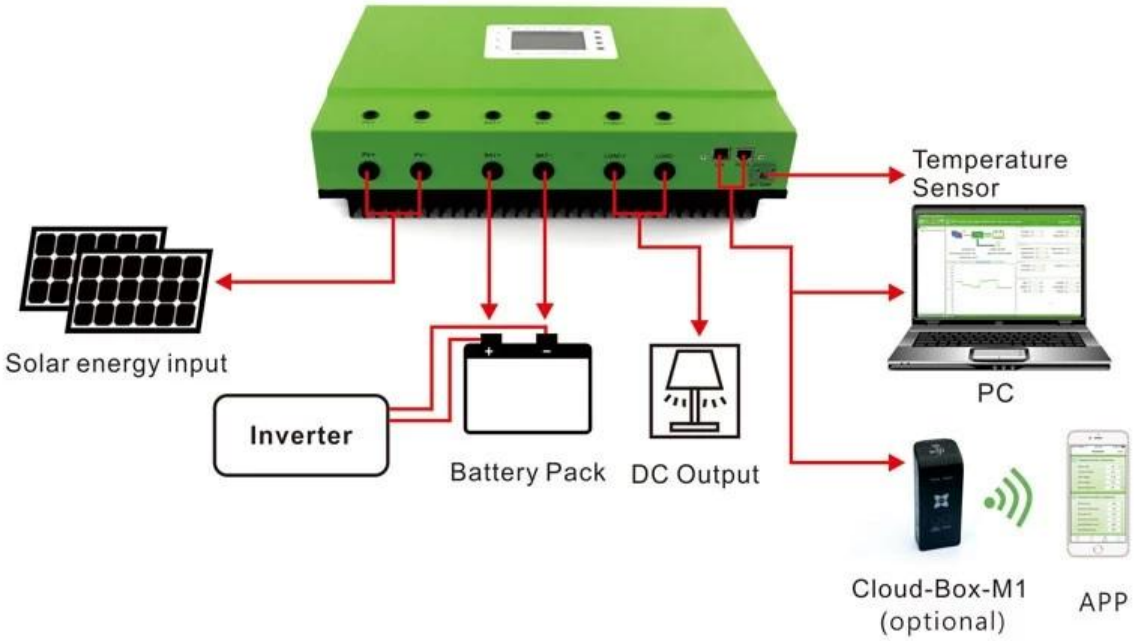
Temperature Sensor
Solar energy input
PC
Inverter
Battery Pack
DC Output
Cloud-Box-M1 (optional)
APP

□□□□□

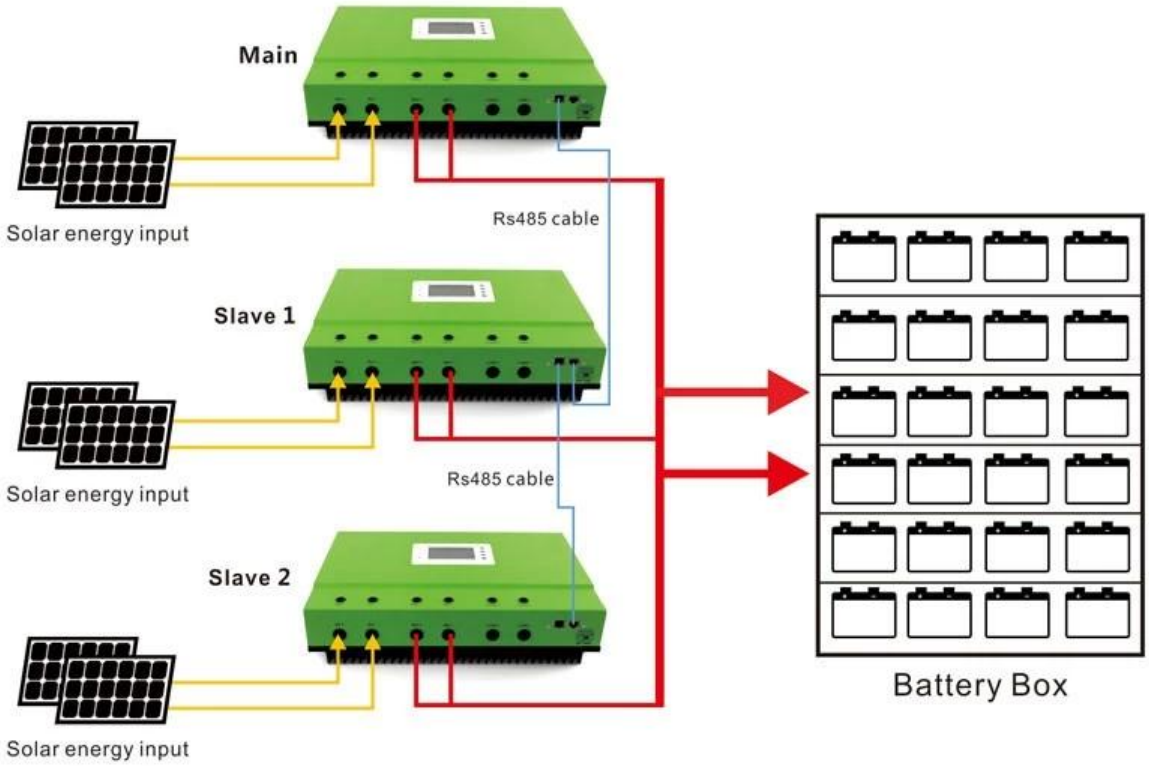
Main
Solar energy input
Rs485 cable
Slave 1
Solar energy input
Rs485 cable
Slave 2
Solar energy input
Battery Box