# □□□□□□□□□96V 192V 216V 240V 384V MPPT□□□□□□□□□□□□

Galaxy□□□□□□□□□□MPPT□□□□□□□□□□□□□□□□□□□□□□□□□□□□□□□□□□□MPPT□□□□□□□PV□□□□□□□□□□□RS485□□□RS232□□□□□□□□□□LAN□□□□□□□□□□□□□□□□□□□

| | | | |
|---|---|---|---|
| Galaxy-B192-XXA | 192V （16*12V | 430V | 50a; 60a |
| Galaxy-B216 | 216V （18*12V | | |
| Galaxy-B240-XXA | 240V （20*12V） | | |
| Galaxy-B384-XXA | 384V（32*12V） | 850V | 70a; 80a |

## □□

1.□□□□MPPT□□□□□□□MPPT□□≥99.5□□□□□□□98□□□□□□□□□□□□□□□□
2.□□□□□□3□□□□□□□□□□□□□□□□

| | | | | | | | | | |
|---|---|---|---|---|---|---|---|---|---|
| □□□□□□□ | □□□□□□□□□□□□□□ | MPPT□□□□□□□□□□□□□□□ | | | | | | | |
| | MPPT□□ | ≥98□ | ≥98□ | ≥98□ | ≥98□ | ≥98□ | ≥98□ | ≥98□ | ≥98□ |
| | □□□□□□□ | DC96V | | | DC192V \ DC216V□DC220V□\ DC240V | | | | |
| | videntification□□□ | DC72V□DC128V | | | DC144V□DC256V \ DC162V□DC288V \ DC180V□DC320V | | | | |
| | □□□□□□ | □□□□□□□□□□□□□□□□□□ | | | | | | | |
| □□□□ | □□□VMAX-PV | DC430V | | | DC430V | DC430V | DC660V | DC660V | DC660V |
| | □□vstart-pv□□□□□□ | VBAT+20V | VBAT+20V | VBAT+20V | VBAT+20V | VBAT+20V | VBAT+20V | VBAT+20V | VBAT+20V |
| | □□□vlow-pv | VBAT+10V | VBAT+10V | VBAT+10V | VBAT+10V | VBAT+10V | VBAT+10V | VBAT+10V | VBAT+10V |
| | □□□□□□□□□□□□□□□Vover-PV | DC430V | DC430V | DC430V | DC430V | DC430V | DC660V | DC660V | DC660V |
| | □□PV□□□ | 7280W | 8320W | 10400 | 10400W \ | 12480W \ | 14560W \ | 16640W \ | 20800W \ |
| | | | | | 11700W \ | 14040W \ | 16380W \ | 18720w \ | 23400W \ |
| | | | | | 13000W | 15600W | 18200W | 20800W | 26000W |
| □□□□ | □□□□□□□□□□□□□□□□ | □□□□□□□□□□□□□□□□□□

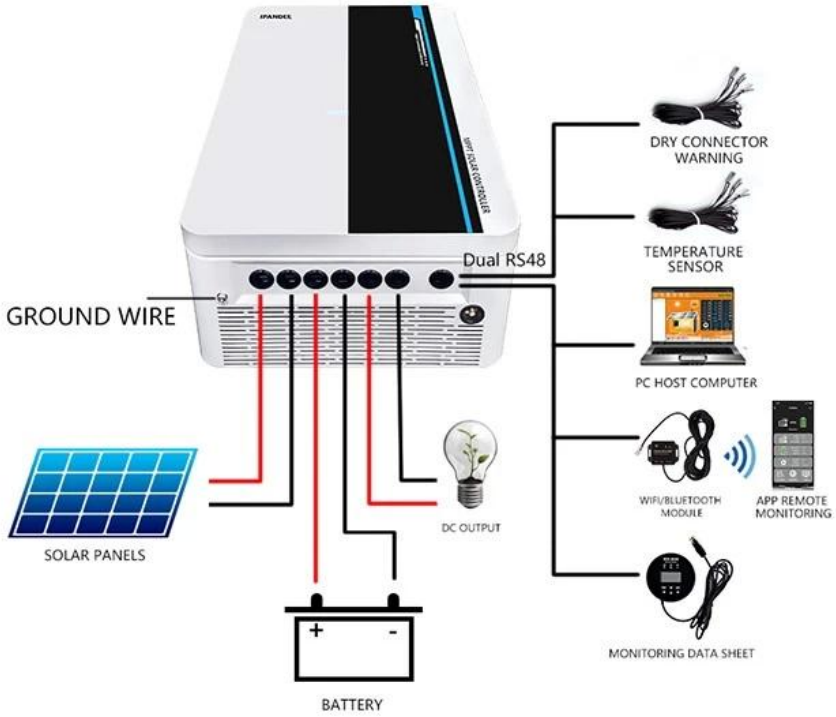
DRY CONNECTOR WARNING
TEMPERATURE SENSOR
Dual RS48
GROUND WIRE
PC HOST COMPUTER
WIFI/BLUETOOTH MODULE
APP REMOTE MONITORING
DC OUTPUT
SOLAR PANELS
MONITORING DATA SHEET
BATTERY

## □□□□□

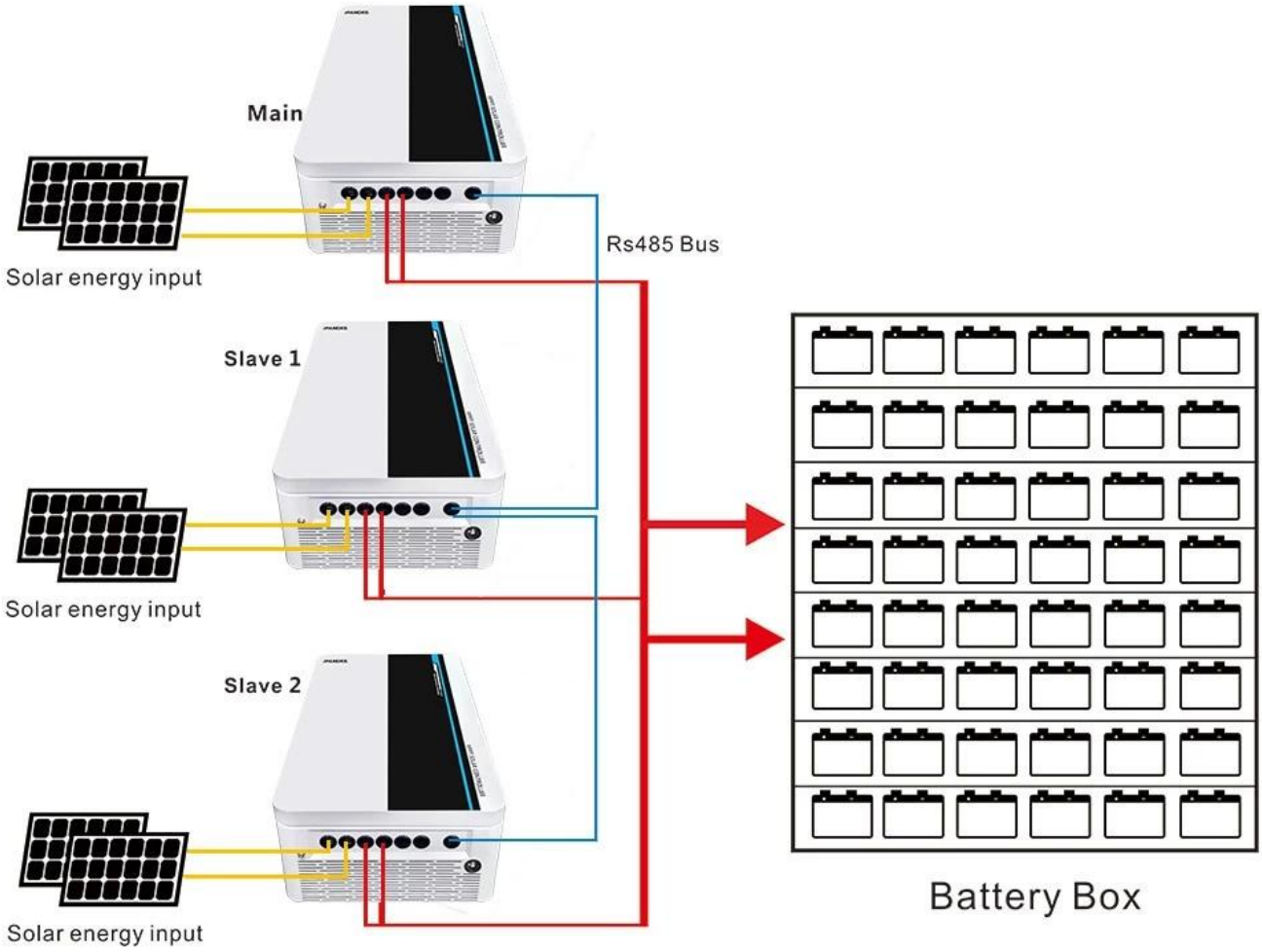
Main
Solar energy input
Rs485 Bus
Slave 1
Solar energy input
Slave 2
Solar energy input
Battery Box

□□□□□□□□□□□□□□□□□□□□□□□□□□□□□□Web□□□□□□□□□□□□□□□