□□□□□□□□

□□□□□□□□□□□□□□□1□□□□□□UPS□□□□

□□□□□□□□□□□□□□□□2□□□□□□□□□□□□□□

3□□□□□□□□□□□□□□□□□□□□

3.1□□□□□□□□□□□□□□□□□□□□□□□□

3.2 AC□□□□□□□□□□□□□□□□□□□□□□□

3.3 DC□□□□□□□□□□□□□□□□□□□□□□

□□

1□□□□□□□□□□□□□□□

2□CPU□□□□□□□□□□□□□

3□LCD□□□□□□□□□□□□□□□□□□□□□□□□□□□□□□

4□□□□□□□□□□□□□□□□□□□□□□□□□

5□□

6□□□

7□□□5□□□□□□□□□□□□□

8□□□

9□CE / EMC / LVD / RoHS□□□□□

10 2□□□□□□□□□□□□□□□□

□□

1□ □□□

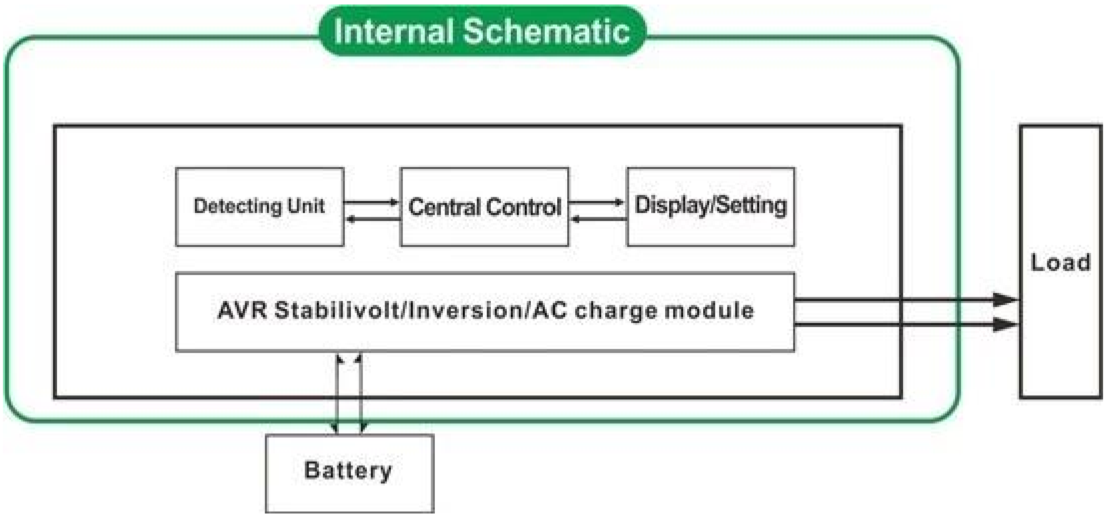

1.1[illegible]FREQUNCY[illegible]01[illegible]AC[illegible]LCD[illegible]

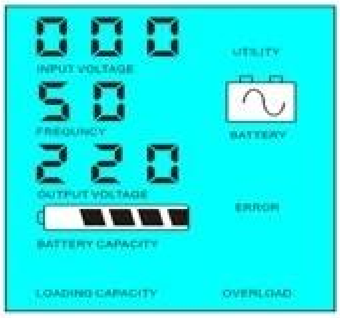

1.2[illegible]LCD[illegible]FREQUNCY[illegible]02[illegible]5[illegible]1-6W[illegible]5[illegible]5[illegible]

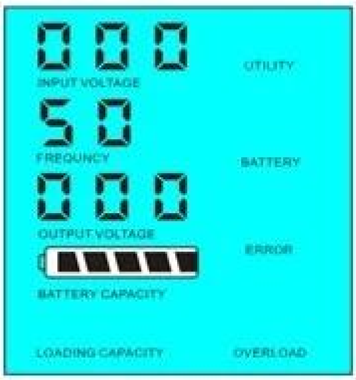

Load's power＜5% of inverter's rated power　　Load's power＞5% of inverter's rated power

2[illegible]UPS[illegible]

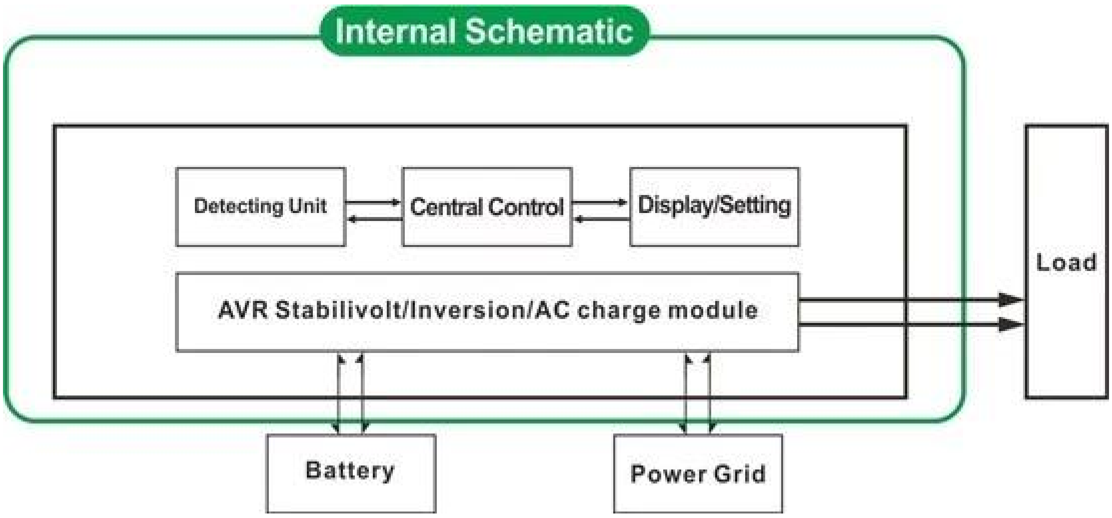

2.1□□□□□□□□□□□□□□□□□□□□UPS□□□□LCD□□□□□□□□□□FREQUENCY□01□□□

□□□□□□□□□□□

□□□□1□□□voltagebeing□

□□□□2□□□□□□□□□□□□□□□□□□□□□5ms□□□□□□□□□□□□□□□□□□□□□□□□□□□□□□□□□□□□□

□□□□3□□

□□□□□□□□□□□□□□□□□□□□□□

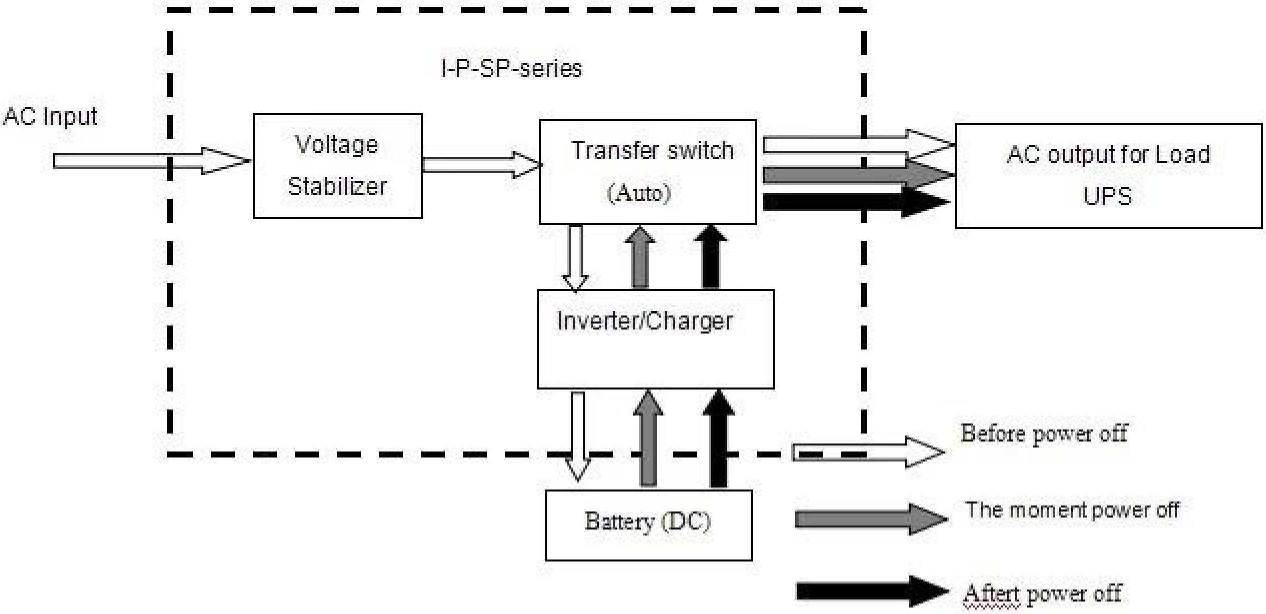

LCD□□□□□□□□□□□□□

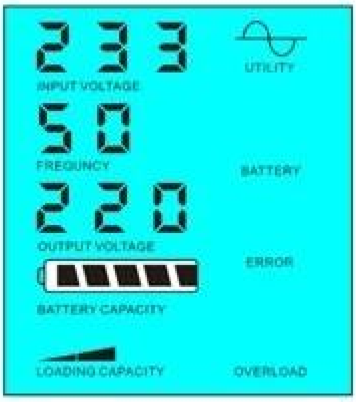

Utility supply power and charge battery

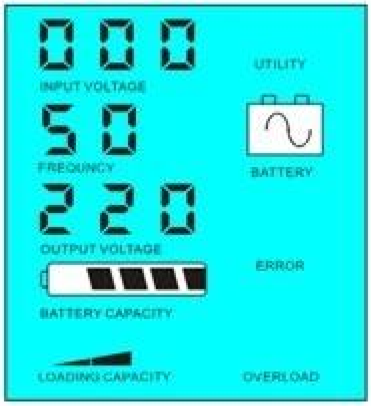

Without utility and battery supply power

2.2[illegible]UPS[illegible]LCD[illegible]FREQUENCY[illegible]03[illegible]

[illegible]

[illegible]1[illegible]

[illegible]2[illegible]

[illegible]3[illegible]

[illegible]

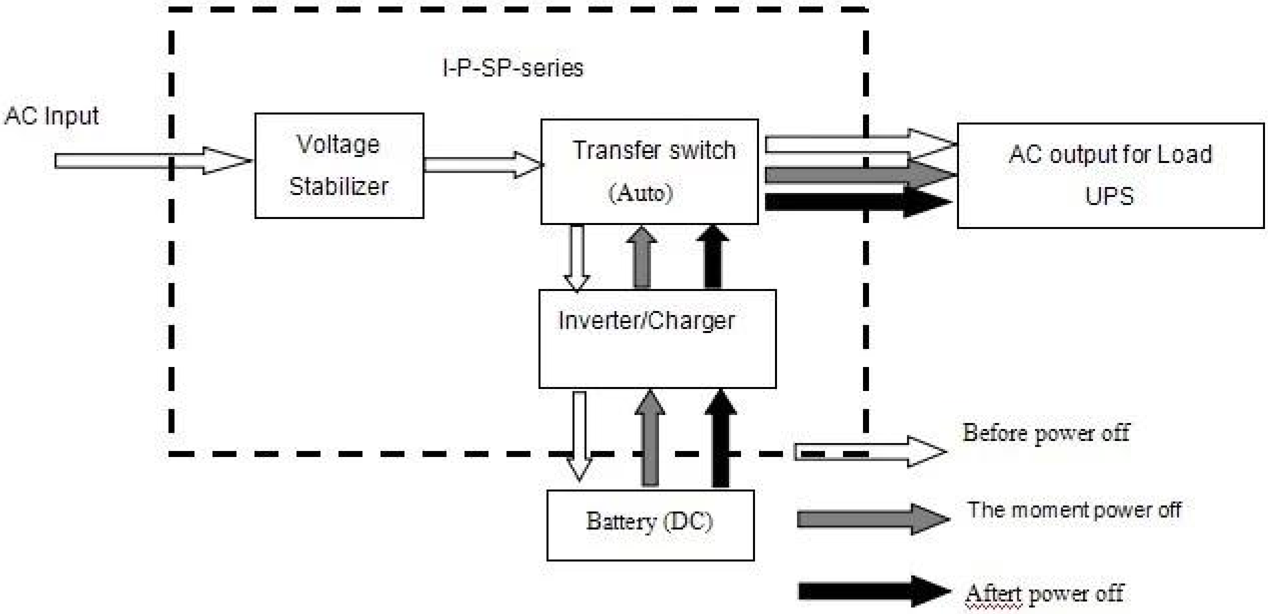

LCD[illegible]

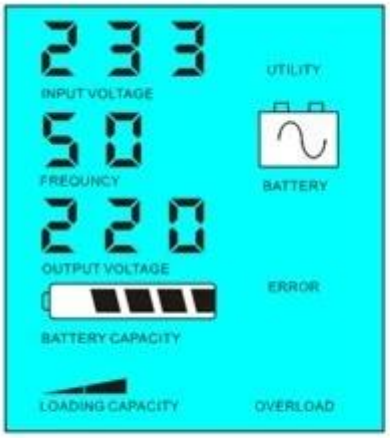

Battery has power

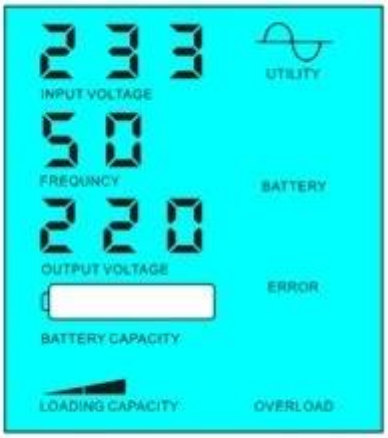

Battery dead, utility supply power

□□□□□□

□□□ □□□□□□□		1000VA
□□□□□□		700W
□□□□□		1500W
□□□□□□□□DC□		24V
□□□W×D×H□mm□□		335 * 165 * 375
□□□□□W×D×H□mm□□		355 * 185 * 395
□□□□□kg□		12
□□□□kg□		13
□□□□□		
□□□□□□□□□	1	□□□□□□□□□□□□□□□□ □□□□□
	2	□□□□□□□□□□□□□□□□□□□□□□□□□□ □□□□□5□□□□□□□□□□□□□□□□□□
	3	□□□□□□□□□□□□□□□□ □□□□□
AC□□	□□	220V□□□□□□□35□110V 35□□□□□□±
	□□□	50Hz□±3□□□60Hz±3□□□□□□□
AC□□	□□	220V±3□□□230V±3□ 240V±3□□□100V±3□
		□□□110V□□□□□□□±3□
	□□□	50Hz□±0.5□□□60Hz±0.5 □□□□□□□
□□	AC□□□□	0□15A
	□□□□	□□□□□□□□□□□ □□
	□□□□□□	□□□□□ □□□□□□□□□□□□□□□□□□□□□□
□□□□□□	□□□□□	□□□□□□□□
	□□□□	□□□□□□□□□□□□ □□□□□□□□ □□□□□□□□□□□ □□
□□□□□□□		□□□□□□□□□□□ □□□≤3
□□□□□		> 120□1□□> 130□□10S
□□□□	□□□□□□□	1□6W
	□□□□□	1□3A
□□□□		80□□□□□□90□□□□□
□□□□		<5ms□□AC□DC / DC□ AC□□
□□		□□□□□□□□□□□□ □□□□□□□□□□□□□□
□□	□□	-10℃□50℃
	□□	10□□□□□□90□□□□□
	□□	≤4000□□□□

□□

[illegible]

[illegible]

[illegible]R[illegible]D[illegible]OEM[illegible]

[illegible]

[illegible]

[illegible]2014[illegible]5[illegible]5[illegible]2[illegible]