12V 24V 48V 5KW TPI2 series Inverter Charger UPS China

Detailed pictures

DC−
DC+
DC INPUT
12V 24V 48V
Remote Port
AC OUTPUT
MAX 5A
AC INPUT AC OUTPUT
L N E L N E
Inverter
Output Protect
Charger
Input Protect

Key Features

1. Surge power of the inverter upto 3 times
2. Output Frequency: 50HZ or 60 HZ adjustable by users
3. Work Modes: DC first / AC first adjustable by users
4. Low power consumtion under sleep mode, 1-6w
5. Three charge stage to battery: CC, CV, CF

To get specification, please download here

Function

1.DC/AC Conversion Function

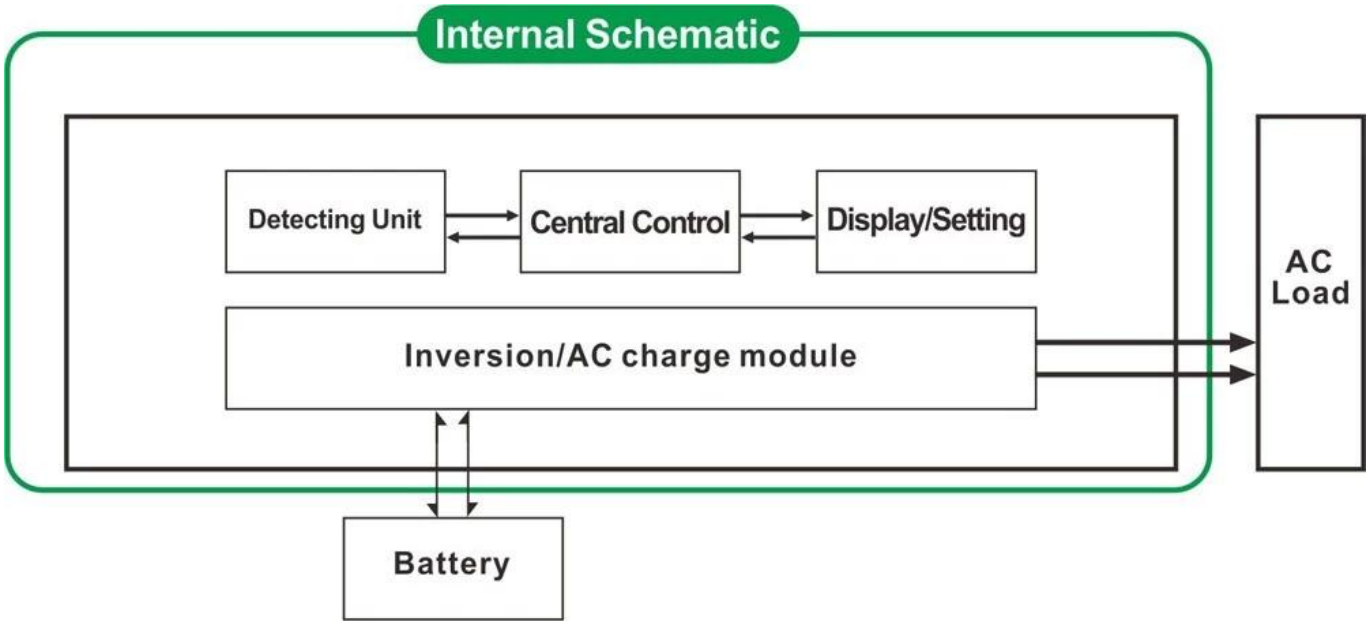

2. High-power intelligent charging function

1It Can charge 8 kinds of batteries (detail please check parameter)

2High charging power (detail please check parameter)

3Three-stage charging mode: Constant current charging stage (CC), Constant voltage charging stage (CV), Float charging stage (CF)

3. UPS function

It can be set as utility first (AC first) battery standby mode or battery first (DC first) utility standby mode.

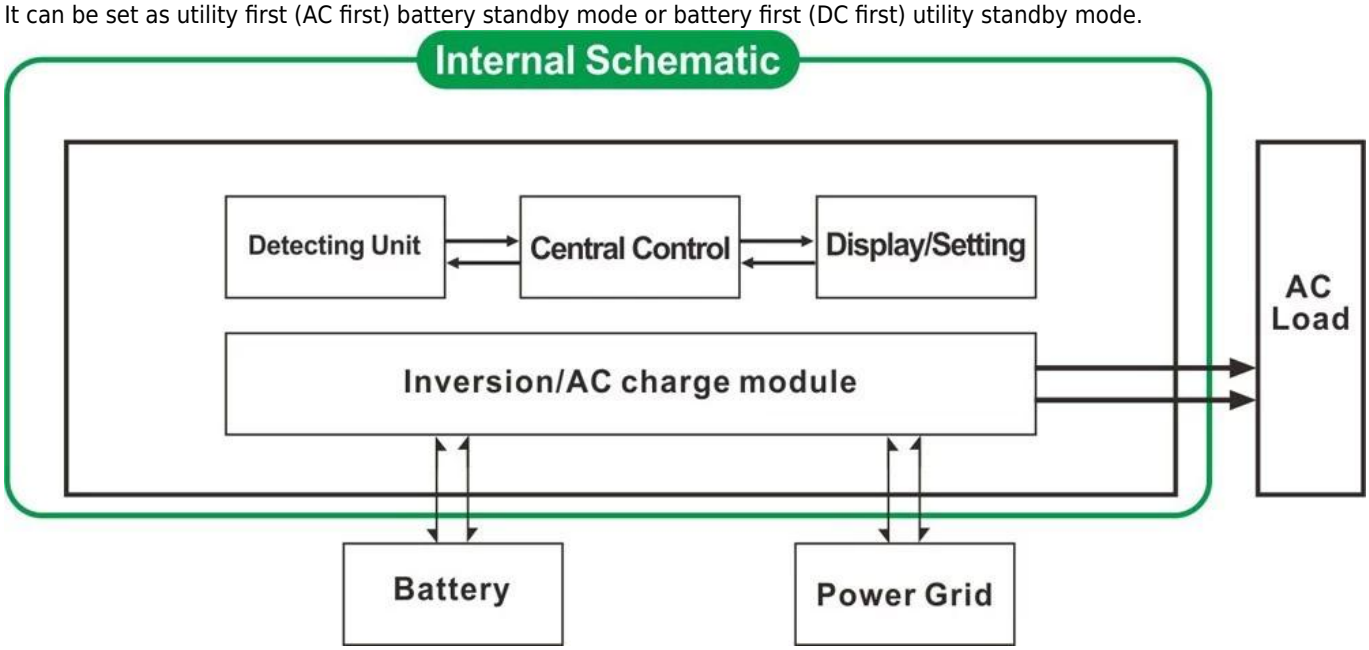

3.1. Utility first, battery standby UPS mode (on the panel turn the button to "AC")

3.2. Battery first, utility standby UPS mode (on the panel turn the button to "DC").

Features

1. Pure sine wave output
2. CPU management, intelligent controlmodular design
3. LCD and LED display can show the parameters and inverter working status.
4. Users can set it in sleep mode or normal working mode and set output priority (AC first or DC first). The output frequency (50Hz or 60Hz) can be chosen.

5. High conversion efficiency (87%-98%), low power consumption (1W~6W under sleep mode). It is the best choice of inverters for solar power system
6. The inverter can charge 8 kinds of batteries such as sealed lead acid battery, open lead-acid battery, gel battery. Kindly note: The lithium battery can be charged also, the related parameters need to be set in factory.
7. High charging power and the charging function can be closed
8. This series of inverters have strong load-carrying ability and overload capacity. The peak power is 3 times of the rated output power. For example, 1KW model can drive 1HP air conditioner, 2KW model can drive 2HP air conditioner, 3KW can drive 3HP conditioner.
9. Adopting the latest American low frequency circuit design, brand new imported electric materials, pure copper transformer, the system is very stable long service life(more than 5 years under normal use)
10. Perfect protection (low input voltage protection, high input voltage protection, over temperature protection, short-circuit protection, overload protection)
11. EMC、LVD、RoHS certification approvals
12. 2-year warranty and life-time technical assistance.

Specification

Parameter / Model			1000W	2000W	3000W	4000W	5000W	6000W
Rated Output Power			1000W	2000W	3000W	4000W	5000W	6000W
Peak Power			3000W	6000W	9000W	12000W	15000W	18000W
Battery Voltage(DC)			12V or 24V or 48V(optional)			24V or 48V(optional)		
Size W×D×H(mm)			318*218*368			440*218*400		
Packing Size W×D×H(mm)			395*275*520			520*275*520		
Net Weight (kg)			27	28	30	39	40	51
Gross Weight (kg)			29	30	32	43	48	53
Working Mode (Setting)	ON		Normal working mode					
	S-ON		Sleep Mode.1-6W consumption When load's power higher than 5% rated output power, it will start to work automatically					
	OFF		Completely off					
AC Input	Voltage		220V±35% or 110V+35%(optional)					
	Frequency		50HZ or 60HZ					
AC Output	Voltage		220V±3% or 230V±3 or 240V±3% or 100V±3% or 110V±3%(optional)					
	Frequency		Frequency is the same as utility's frequency in utility mode. Frequency 50Hz or 60Hz(optional) in DC/AC convert mode					
Utility Charging (Battery type "0" means that AC charging function is closed)	AC Charge Current (Max)	BAT	1000W	2000W	3000W	4000W	5000W	6000W
		12V	35A	65A	75A	/	/	/
		24V	20A	35A	45A	65A	70A	75A
		48V	10A	15A	30A	35A	40A	50A
	Battery Type		American Gel Battery, Wool Battery 1, Wool Battery2, Sealed Lead Acid Battery, Europe Gel Battery, Open Lead Acid batteries, Calcium Battery, De-Acid Battery or OEM Battery					
	Charging Mode		Three-stage charging、CC, CV, CF					
	Charging Time		Decided by battery capacity and quantity					
	Battery Protection		Automatic detection、charge and discharge protection, intelligent management					
UPS Priority	AC		Utility first, battery standby					
	DC		Battery first, utility standby					
Display	Display Mode		LCD+LED					
	Display Information		Input voltage、output voltage、output frequency、battery capacity、Load condition、Status Information					
Output Wave Type			Pure sine wave					
Overload Ability			、120% 1 min、、130% 10s					
Power Consumption	Sleep Mode		1~6W					
	Normal Mode		1~3A					
Conversion Efficiency			87%~98%					
Transfer Time			、5ms 、AC to DC / DC to AC、					
Protection			Overload output、short-circuit、high-voltage input、low-voltage input、overheats					
Environment		Temperature	-10℃、50℃					
		Humidity	10%、90%					
		Altitude	≤4000m					

Certificates

ISO2008
ISO2004
CE-EMC
CE-LVD
FCC
RoHS

Service and contact

1. OEM and ODM orders are provided.
2. Power solution consult available based on technical group
3. 24 months warranty; lifelong time extended technical service.
4. Any of your questions will be guided by professional technical team.
5. Free technical study and discussion on products are provided every year.

One of our other Key product: I-P-Smart2 MPPT charge controller.