I-P-TPI2-1000W-6000W is adopted the world's leading low-frequency inversion technical solutions. This series of inverter has the advantages of high conversion efficiency, low power consumption, super load-carrying ability, and large charging current. Users can set it to sleep mode and normal working mode according to the AC loads. Users also can set the output priority (AC first or DC first) and choose the output frequency 50Hz or 60Hz. It's our second generation TPI series.

Application

Industrial, commercial, household back-up power supply
Movable AC supply power
Main supply power for industrial products
Off-grid energy generator system(best partner MPPT solar charge controller)

Function

1. DC to AC Conversion Function

It can be set to normal working mode (on the panel turn the button to "ON") or sleep mode (on the panel turn the
button to S-ON)

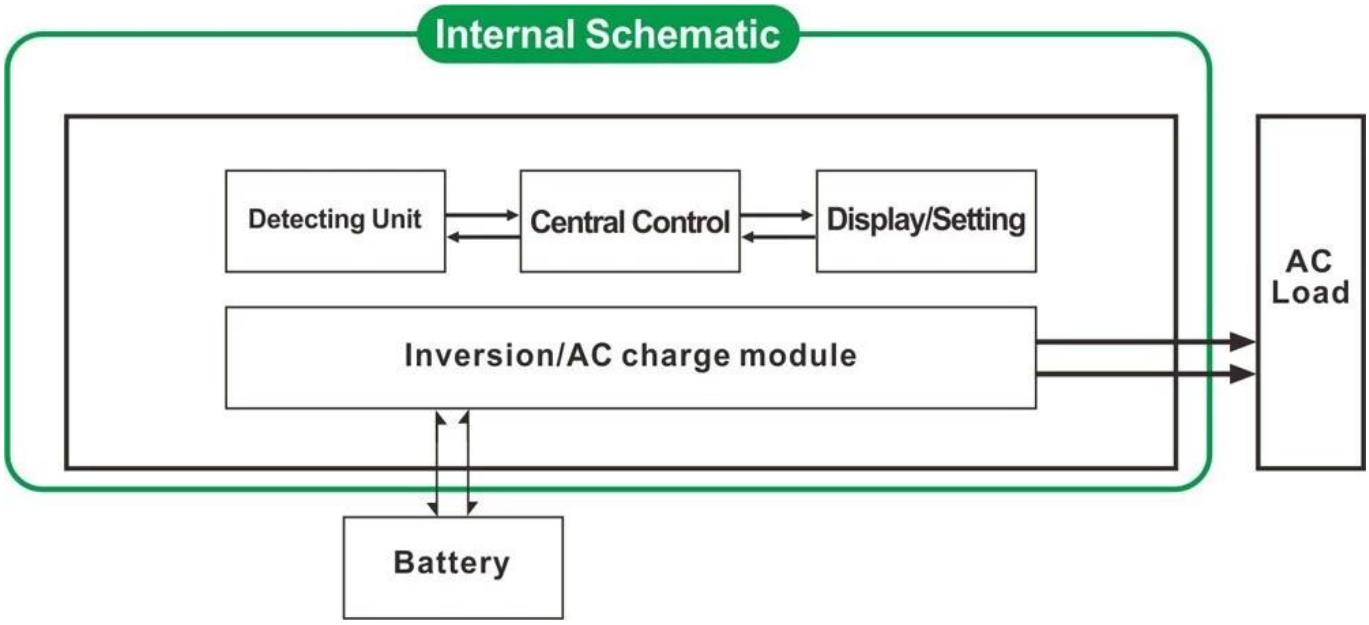

1.1 Normal working mode (ON): No matter it's connected AC loads or not
the inverter always convert DC to AC. The LCD of the inverter display the output voltage. The power consumption in normal working mode is a little higher than in sleep mode
1.2 Sleep mode (S-ON): If the power of the connected AC loads is lower than 5% of the rated power of the inverter, there is no output from the inverter. The LCD of it shows 0. Only the chip of inverter is working. The power consumption of the inverter is only 1-6W. If the power of the connected AC loads is more than 5%, then the inverter automatically convert DC to AC to supply power for the loads within 5s. The LCD of it display no output.

2. High-power intelligent charging function

1) It Can charge 8 kinds of batteries (detail please check parameter)
2) High charging power (detail please check parameter)
3) Three-stage charging mode: Constant current charging stage (CC), Constant voltage charging stage (CV), Float charging stage (CF)

Note: When the battery type is set to "0", it will not charge the battery and charging current is "0".

The charging
indicator will not light.

3. UPS function

It can be set as utility first (AC first) battery standby mode or battery first (DC first) utility standby mode.

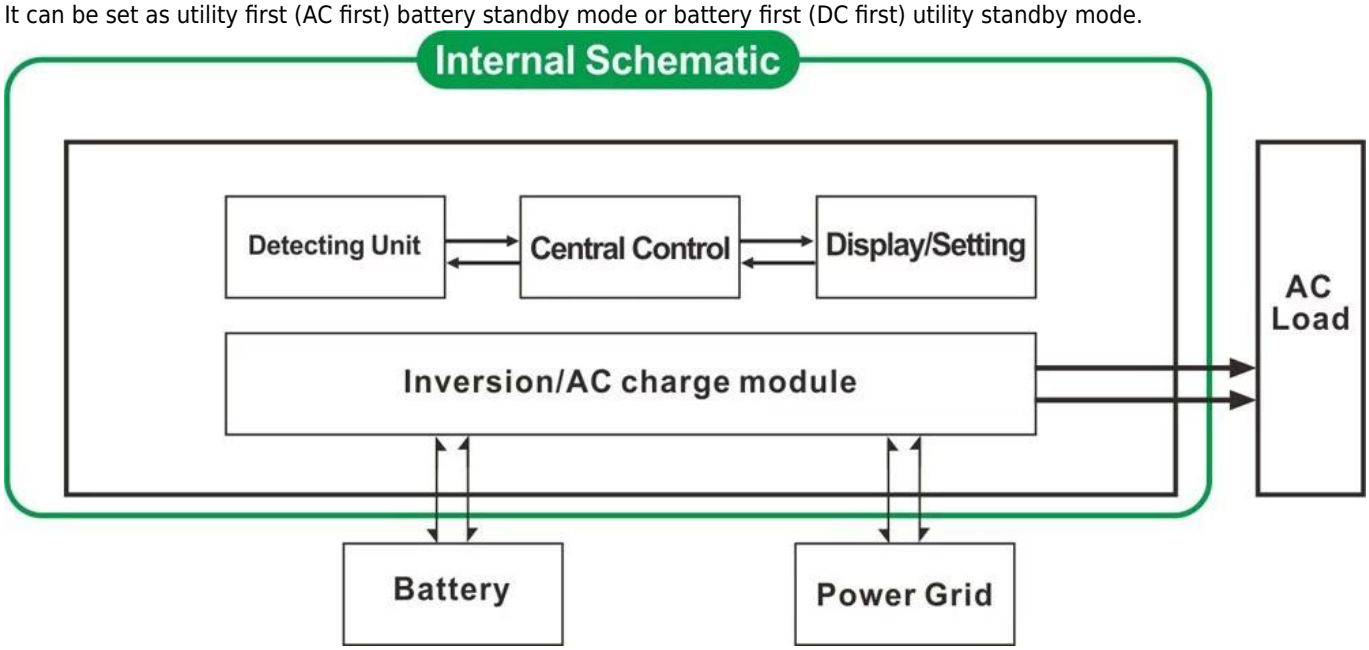

3.1. Utility first, battery standby UPS mode (on the panel turn the button to "AC")
3.2. Battery first, utility standby UPS mode (on the panel turn the button to "DC").

Features

1. Pure sine wave output
2. CPU management, intelligent control□modular design
3. LCD and LED display can show the parameters and inverter working status.
4. Users can set it in sleep mode or normal working mode and set output priority (AC first or DC first). The output frequency (50Hz or 60Hz) can be chosen.
5. High conversion efficiency (87%-98%), low power consumption (1W~6W under sleep mode). It is the best choice of inverters for solar power system
6. The inverter can charge 8 kinds of batteries such as sealed lead acid battery, open lead-acid battery, gel battery. Kindly note: The lithium battery can be charged also, the related parameters need to be set in factory.
7. High charging power and the charging function can be closed
8. This series of inverters have strong load-carrying ability and overload capacity. The peak power is 3 times of the rated output power. For example, 1KW model can drive 1HP air conditioner, 2KW model can drive 2HP air conditioner, 3KW can drive 3HP conditioner.
9. Adopting the latest American low frequency circuit design, brand new imported electric materials, pure copper transformer, the system is very stable long service life(more than 5 years under normal use)
10. Perfect protection (low input voltage protection, high input voltage protection, over temperature protection, short-circuit protection, overload protection)
11. EMC□LVD□RoHS certification approvals
12. 2-year warranty and life-time technical assistance.

Specification

Parameter Model		6000W
Rated Output Power		6000W
Peak Power		18000W
Battery Voltage(DC)		24V or 48V(optional)
Size W×D×H(mm)		440*218*400
Packing Size W×D×H(mm)		520*275*520
Net Weight (kg)		51
Gross Weight (kg)		53
Working Mode □Setting□	ON	Normal working mode
	S-ON	Sleep Mode, 1~6W consumption when load’s power higher than 5% rated output power, it will start to work automatically
	OFF	Completely off

AC Input	Voltage	220V±35% or 110V+35%（optional）	
	Frequency	50HZ or 60HZ	
AC Output	Voltage	220V±3% or 230V±3 or 240V±3% or 100V±3% or 110V±3%（optional）	
	Frequency	Frequency is the same as under utility mode Frequency 50Hz or 60Hz（optional）in DC/AC convert mode	
Utility charging (Battery type “0” means charging function is closed)	AC charge current （MAX）	24V	48V
		75A	50A
	Battery type	American gel battery, Wool battery 1, Wool battery2, Sealed Lead Acid Battery, Europe gel battery, Open lead-acid batteries, Calcium Battery, De-Acid Battery or OEM Battery	
	Charging mode	Three-stage charging: CC, CV, CF	
	Charging time	Decided by battery capacity and quantity	
	Battery protection	Automatic detection, charge and discharge protection, intelligent management	
UPS priority	AC	Utility first, battery standby	
	DC	Battery first, utility standby	
Display	Display Mode	LCD+LED	
	Display Information	Input voltage, output voltage, output frequency, battery capacity, Load condition, Status Information	
Output Wave Type		Pure sine wave	
Overload Ability		120% 1 min, 130% 10s	
Power Consumption	Sleep Mode	1~6W	
	Normal Mode	1~3A	
Conversion Efficiency		87%~98%	
Transfer Time		5ms （AC to DC / DC to AC）	
Protection		Overload output, short-circuit, high-voltage input, low-voltage input, overheats	
Environment	Temperature	-10℃～50℃	
	Humidity	10%～90%	
	Altitude	≤4000m	

Certificates

ISO2008
ISO2004
CE-EMC
CE-LVD
FCC
RoHS

Service

1. OEM and ODM orders are provided.
2. Power solution consult available based on technical group
3. 24 months warranty; lifelong time extended technical service.
4. Any of your questions will be guided by professional technical team.
5. Free technical study and discussion on products are provided every year.