[illegible]96V 192V 216V 240V 384V MPPT[illegible]

Galaxy[illegible]MPPT[illegible]MPPT[illegible]PV[illegible]RS485[illegible]RS232[illegible]LAN[illegible]

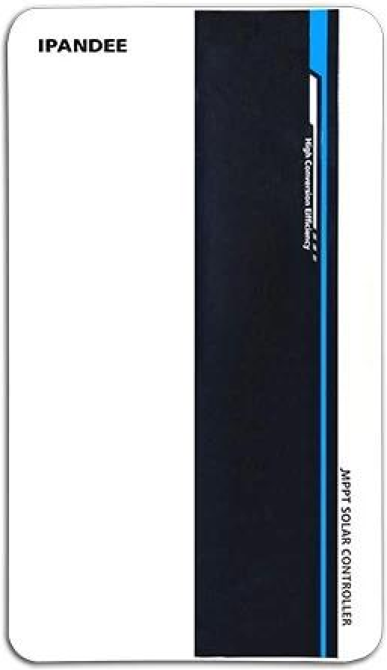

[illegible]

[illegible]	[illegible]	[illegible]PV[illegible]	[illegible]
Galaxy-B96-XXA	96V [illegible]8*12V[illegible]	430V	70a; 80a

Galaxy-B192-XXA	192V □16*12V□	430V	50a; 60a
Galaxy-B216□220□-XXA	216V □18*12V□		
Galaxy-B240-XXA	240V □20*12V□		
Galaxy-B384-XXA	384V □32*12V□	850V	70a; 80a

□□

1.□□□□□□MPPT□□□MPPT□□≥99.5□□□□□□□□□98□□
2.□□□□□□□□□□□□□□□□□□□□□□□□□□□□□□□□□□□□□□□
3.□□□□□□□□□□□□□□/□□PV□□□□□□□□□□□□□PV+□□□□□
4.□□□□□□□□□□□□□□□□□□□\ gel \ flooded□□□□□□FCUN□□□□□□□□□□□□□□□□□□□□□□□
5.□□□□□□□□□□□□□□□PV□□□□□□□□□□□□□□□□□□□□□□□□□□□□□□□□□□□□□
6.□□□□□□□□□□□□□□□□□□□□□
7.□□□LCD□□□□□□□□□□□□□□□□□□□□□□□□□□□□□□□□□□□□□□
8.RS485□□□□□□□□□□□□□□□□□□□□□□□□□□□□□□□□□□
9.Support PC□□□□□WiFi□□□□□□□□□□□□
10.CE□ROHS□FCC□□□□□□□□□□□□□□□□□□□□□□□□□□
□□□□□11□2□□□□□2□10□□□□□□□□□□

PC□□□□□□□□□□□□□□□□□

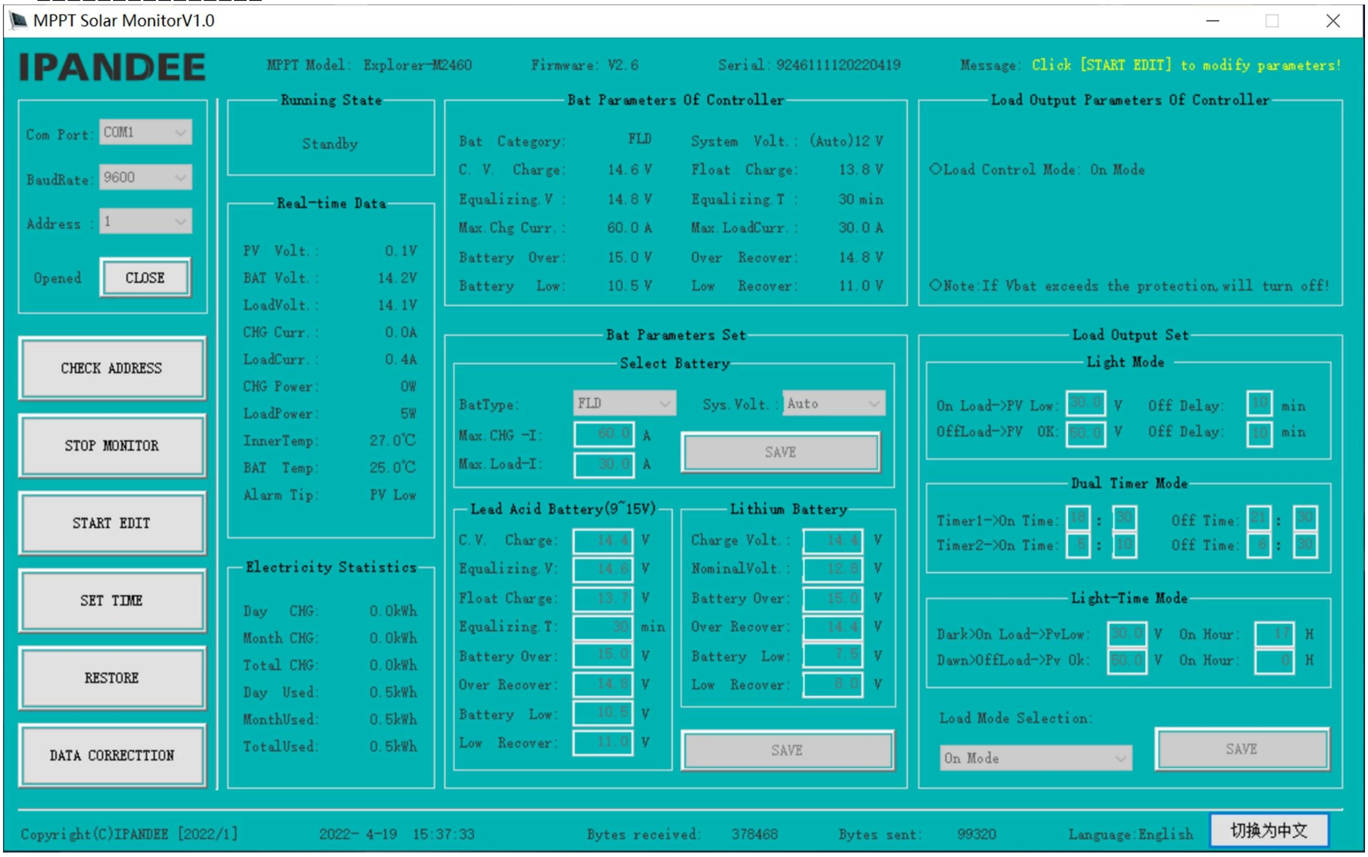

PC□□

□□

□□

□□	□□	B96			B192 \ b216□220□\ b240				
	□□□□	70a	80a	100a	50a	60a	70a	80a	100a
□□□□	□□□□□	MPPT□□□□□□□□							
	MPPT□□	≥98□	≥98□	≥98□	≥98□	≥98□	≥98□	≥98□	≥98□
	□□□□	DC96V			DC192V \ DC216V□DC220V□\ DC240V				
	VICENIFICAL□□	DC72V□DC128V			DC144V□DC256V \ DC162V□DC288V \ DC180V□DC320V				
	□□□□	□□□□□□							
□□□□	□□VMAX-PV	DC430V			DC430V	DC430V	DC660V	DC660V	DC660V
	□□□□VSTART-PV	VBAT+20V	VBAT+20V	VBAT+20V	VBAT+20V	VBAT+20V	VBAT+20V	VBAT+20V	VBAT+20V
	□□□vlow-pv	VBAT+10V	VBAT+10V	VBAT+10V	VBAT+10V	VBAT+10V	VBAT+10V	VBAT+10V	VBAT+10V
	□□□□VOVE-PV	DC430V	DC430V	DC430V	DC430V	DC430V	DC660V	DC660V	DC660V
	□□□□□□□	7280W	8320W	10400	10400W \ 11700W \ 13000W	12480W \ 14040W \ 15600W	14560W \ 16380W \ 18200W	16640W \ 18720W \ 20800W	20800W \ 23400W \ 26000W
□□□□	□□□□□□□	□□□□□□□□□□□□□□□□□□□□□□□□□□ - □□□□□□							
	□□□□□□	70a	80a	100a	50a	60a	70a	80a	100a
	□□□□	□□□□□□□□□□□□□□□ - □□□□□□□□							
□□□□	□□□□	□□□□□□□			□□□□□□□		□	□	□
	□□□□□□	70a	80a	100a	50a	60a	□	□	□
	□□□□□□	□\ OFF□□□□PV□□□□□□□□□□□□□□PV +□□□□□□					□	□	□
□□□□□	□□□□	LCD128*64□/□□□□							
	□□□□	8□RJ45□□/RS485/□□PC□□□□/□□WiFi□□□□□□□□□□□							
□□□□	□□□□	□□□□□□\ \ \ \□□□□□□□□□□□□□□□							
	□□□□	-20℃□+50℃							
	□□□□	-40℃□+75℃							
	IP□□□□□□	IP21							
	□□/□□□	14.7kg			14.7kg		18.8□□		
	□□□kg□	16.6kg			16.6kg		20.6kg		
	□□□□□mm□	371*500*187			371*500*187		391*500*227		
	□□□□□mm□	590*420*270			590*420*270		590*440*320		

□□□□□

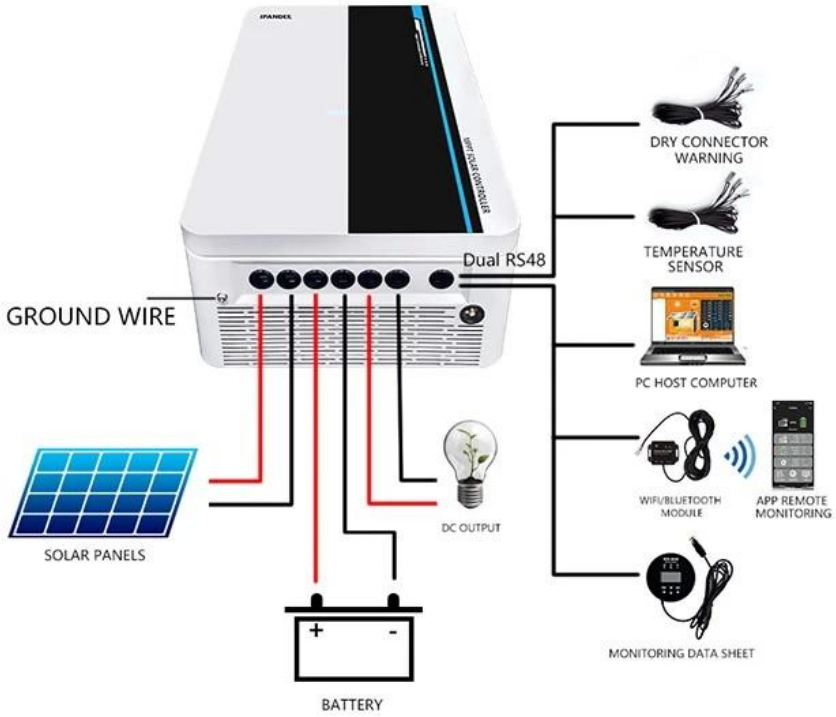
DRY CONNECTOR WARNING
TEMPERATURE SENSOR
Dual RS48
GROUND WIRE
PC HOST COMPUTER
WIFI/BLUETOOTH MODULE
APP REMOTE MONITORING
DC OUTPUT
SOLAR PANELS
MONITORING DATA SHEET
BATTERY

□□□□□

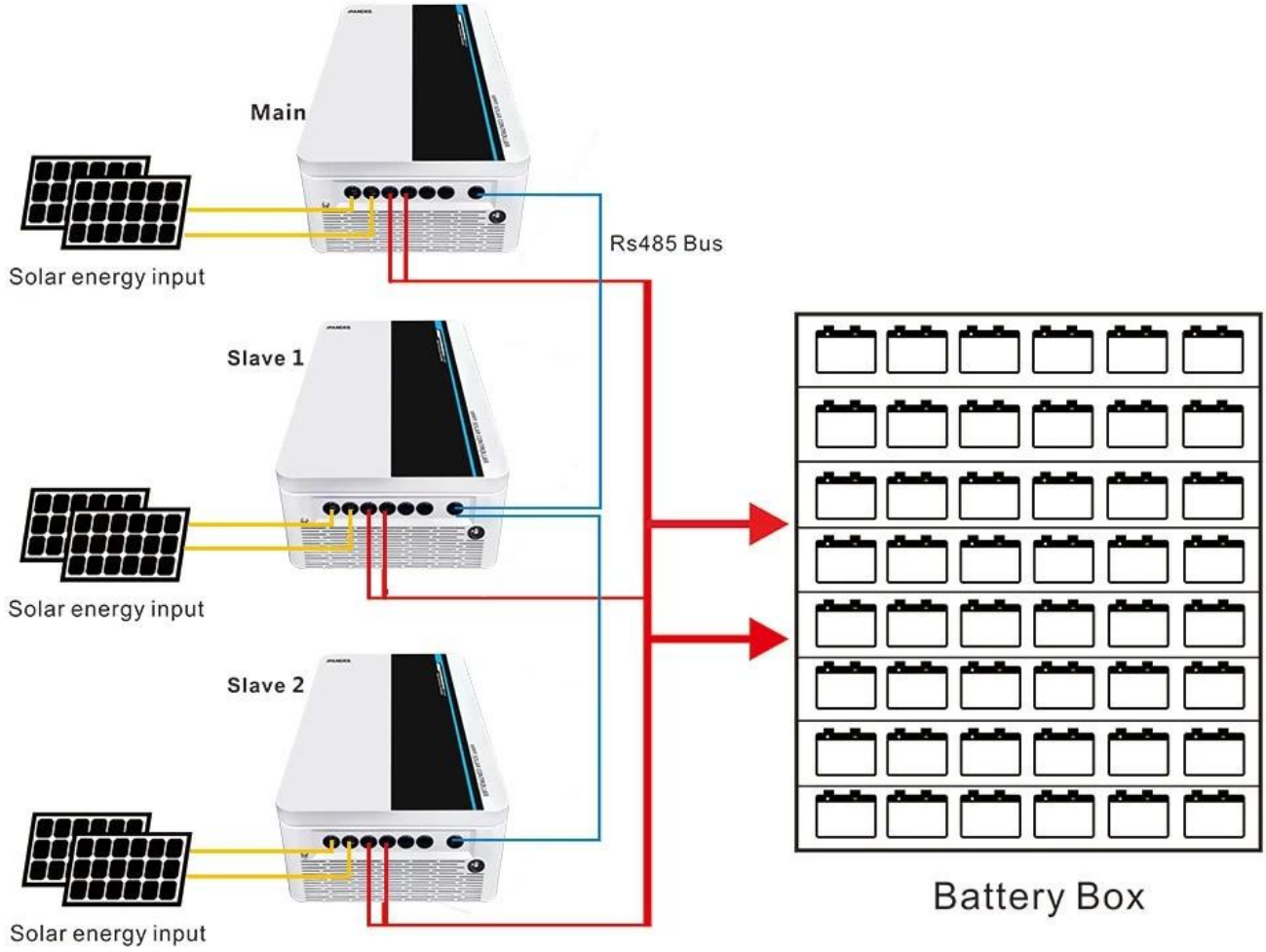
Main
Solar energy input
Rs485 Bus
Slave 1
Solar energy input
Slave 2
Solar energy input
Battery Box

□□□