I-P-SPC Power Inverter with Built-in Solar Charge Controller 1500W

Application

1)Off-grid solar power system

2) Utility and solar complementary power generation system

Features

1) Easy to install. To configure a solar system, users just need to connect it with solar panels and batteries.

2)CPU management,Intelligent control,modular design

3)LEDs LCD display. LCD can display various parameters(such as the output voltage, frequency, working mode)

4)Multifunction design, AVR UPS function. Users don’t need to buy solar, controller, AC charger or stabilizer.

5) External battery connection, it’s convenient for users to expand use time and back-up power time

6)With super load-carrying ability and high load capacity, this series of inverters can not only drive resistance load; but also various kinds of inductive loads such as motor, air conditioner, electric drills, fluorescent lamp, gas lamp. It can drive almost any kinds of load

7)Low frequency pure sine wave circuit design, stable quality, easy to maintenance, low failure rate and long service life (under proper operation, it can last at least 5 years)

8) Perfect protection: low voltage protection, high voltage protection, over temperature protection, short-circuit protection, overload protection

9) CE / EMC / LVD/ RoHS /FCC approvals

10) 2 years warranty, life-long technical support

Off-grid solar power system

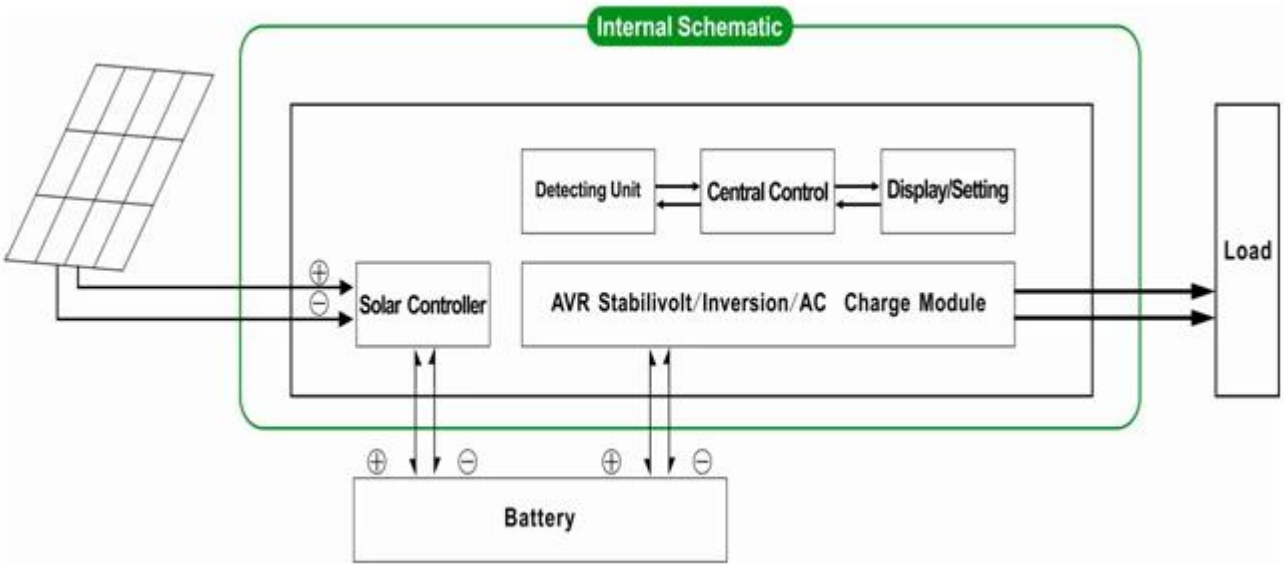

Utility and solar complementary power generation system

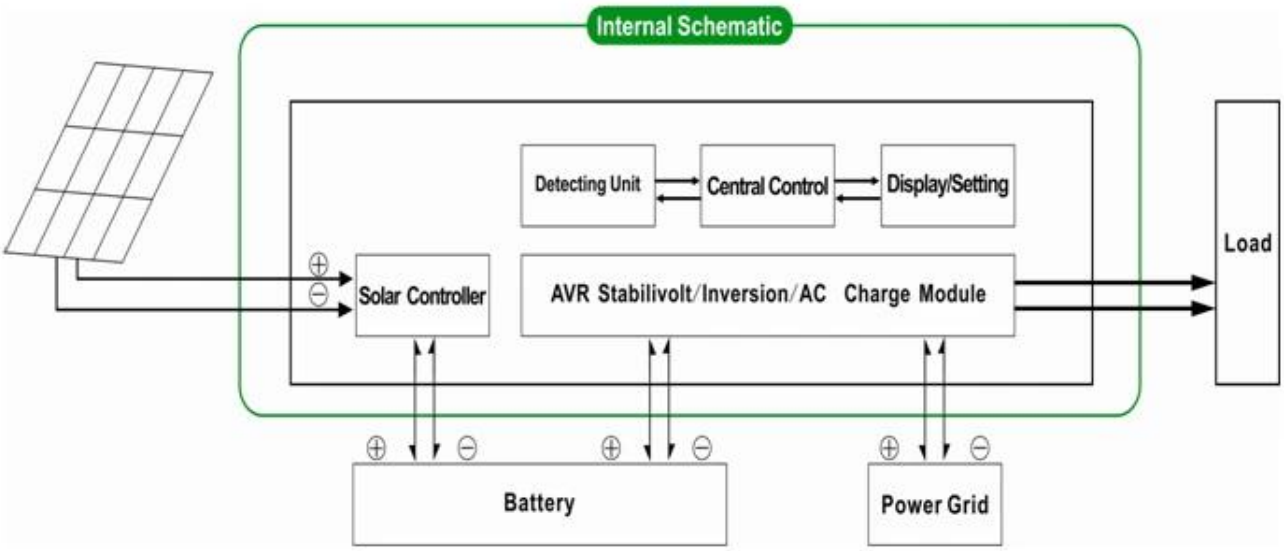

Parameter

Mode		2000VA
Rated Output Capacity		1500W
Peak Power		3000W
Battery Voltage(DC)		24V or 48V
PWM Solar Controller	Voltage	24V or 48V
	Current	30A
	PV Max Input Voltage	24V System□50V 48V System□100V
Size W×D×H(mm)		350*220*460
Packing Size W×D×H(mm)		370*240*480
Net Weight (kg)		20
Gross Weight (kg)		22
General Parameter		

Working Mode (Setting)	1	Utility first (AC first) battery standby mode
	2	Sleep Mode,no utility,load’s power is over 5% of rated output power, Inverter start to work automatically
	3	Battery first (DC first)utility standby mode
AC Input	Voltage	220V±35% or 110V+35%（Optional）
	Frequency	50Hz±3% or 60Hz±3% （Optional）
AC Output	Voltage	220V±3% or 230V±3 or240V±3% or 100V±3% or 110V±3% (Optional)
	Frequency	50Hz±0.5 or 60Hz±0.5 (Optional)
Utility charge	AC Charge Current	0~15A
	Charge Time	Depend on battery capacity and quantity
	Battery Protection	Automatic detection, Charge and discharge protection，Intelligent Management
PV Charge		Total Current of PV Input Should Be Less Than Rated Current of PWM solar controller
Display	Display Mode	LCD+LED
	Display Information	Input voltage，output voltage，output frequency，battery capacity，Load condition，Status Information
Output Wave Type		Pure sine wave output,Total Harmonic Distortion THD≤3
Overload Ability		（120% 1 min）（130% 10s
Power Consumption	Sleep Mode	1~6W
	Normal Mode	1~3A
Conversion Efficiency		80%~90%
Transfer Time		（5ms （AC to DC / DC to AC）
Protection		Overload output，short-circuit，high-voltage input，low-voltage input，overheat
Environment	Temperature	-10℃～50℃
	Humidity	10%～90%
	Altitude	≤4000m

The above is our standard parameter. Subject to change without prior notice.

We have our own professional inverter and controller R&D team and we provide technical support and OEM ODM service

The controller information above is our company’s standard parameter.It can be changed to other PWM solar charge controller.

Connection Diagram

I-P-SPC-Series System

I-P-SPC-Series Inverter+Solar Controller