**□□□□□□□□□□□□□□□□□□□UPS 2KW**

□□□□

BAT Type
S-ON
AC
50HZ
AC
60HZ
DC
Inverter
Charger
Next Page
Alarm
OFF
ON
S-ON
Power Inverter

DC−
DC+
DC INPUT
12V 24V 48V
Remote Port
AC OUTPUT
MAX 5A
AC INPUT
AC OUTPUT
L N E L N E
Inverter
Output Protect
Charger
Input Protect

□□□□
□□□□3□□1□□□□
2□□□□□□□50Hz□60Hz□□□□
3□□□□□□□□□□/□□□□□□□□□□
□□□□□□4□□□□□□1-6W
5□□□□□□□□□□CC□CV□CF□

□□□□□□□□ □□□□□

□□
**1.DC /□□□□□□**

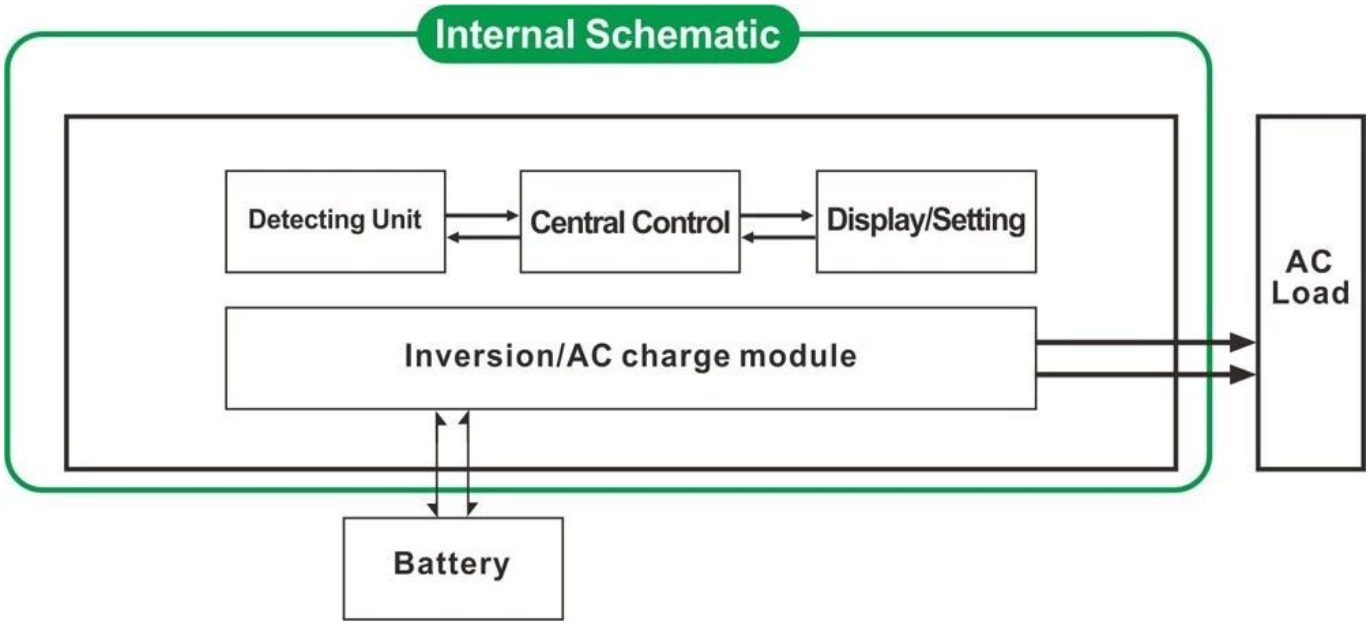


**2**□□□□□□□□□□□

1□□□□8□□□□□□□□□□□□□

2□□□□□□□□□□□□□□□□□

3□□□□□□□□□□□□□□□□□□CC□□□□□□□□□□CV□□□□□□□□□CF□

**3□UPS□□**

□□□□□□□□□□□□□AC□□□□□□□□□□□□□□□□□□□□DC□□□□□□□□□□

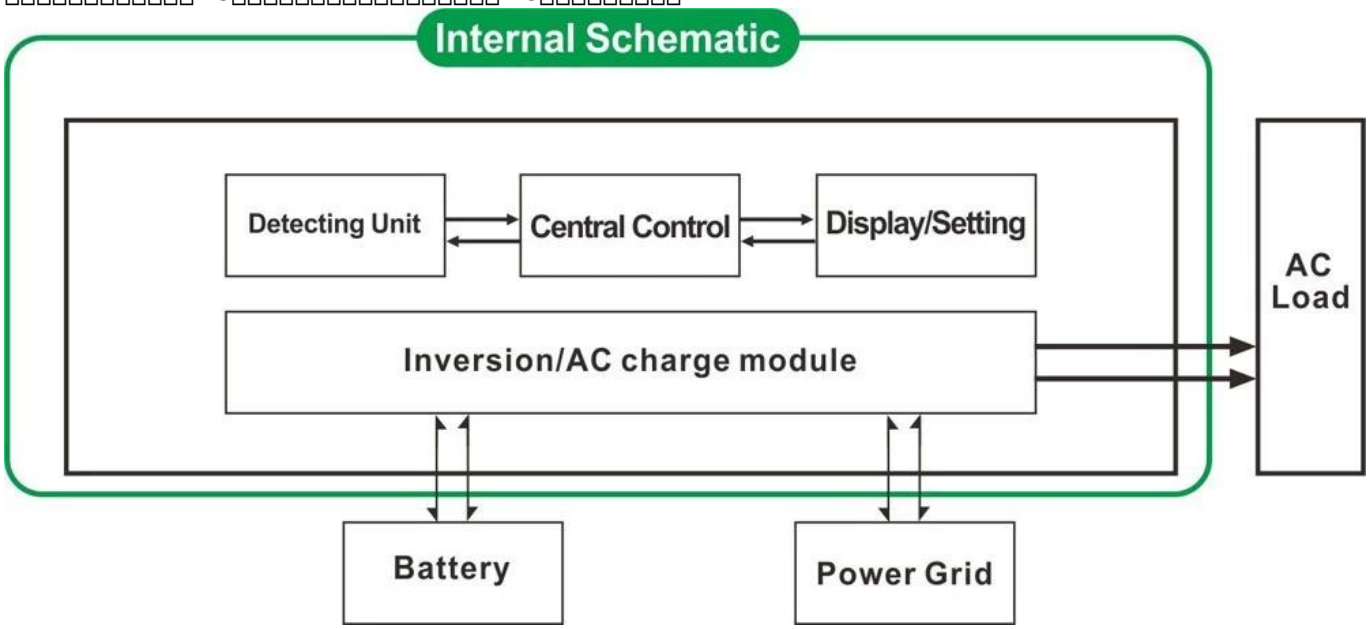


3.1□□□□□□□□□□□□UPS□□□□□□□□□□□□□“AC”□

3.2□□□□□□□□□□□□UPS□□□□□□□□□□□□□“DC”□□

□□□□

1□□□□□□□

2□CPU□□□□□□□□□□□□□□□□

3□LCD□LED□□□□□□□□□□□□□□□□□□□□

4□□□□□□□□□□□□□□□□□□□□□□□□□□□□□□□□□□□□□□□□□□□□□50Hz□60Hz□□□□□□

5□□□□□□□87□-98□□□□□□□□□□□□□□1W□6W□□□□□□□□□□□□□□□□□□□□□□□□

6□□□□□□□8□□□□□□□□□□□□□□□□□□□□□□□□□□□□□□□□□□□□□□□□□□□□□□□□□□□□□□□□□□□□□

7□□□□□□□□□□□□□□□□□□

8□□□□□□□□□□□□□□□□□□□□□□□□□□□□□□□□□□□□□3□□□□□1KW□□□□1HP□□□2KW□□□□□□2□□□□3KW□□□□3HP□□

9□□□□□□□□□□□□□□□□□□□□□□□□□□□□□□□□□□□□□□□□□□□□□□□□□□□□□□□□5□□□□

10□□□□□□□□□□□□□□□□□□□□□□□□□□□□□□□□□□□□□□□□□□□□□□□□□

11□EMC□LVD□RoHS□□□□

12□2□□□□□□□□□□□□□□□

□□

| □□ / □□ | | | 1000W | 2000W | 3000W | 4000W | 5000W | 6000W |
|---|---|---|---|---|---|---|---|---|
| □□□□□□ | | | 1000W | 2000W | 3000W | 4000W | 5000W | 6000W |
| □□□□ | | | 3000W | 6000W | 9000W | 12000W | 15000W | 18000W |
| □□□□□DC□ | | | 12V□24V□48V□□□□ | | | 24V□48V□□□□ | | |
| □□□×□×□□mm□ | | | 318 * 218 * 368 | | | 440 * 218 * 400 | | |
| □□□□□×□×□□mm□ | | | 395 * 275 * 520 | | | 520 * 275 * 520 | | |
| □□□□□□ | | | 27 | 28 | 30 | 39 | 40 | 51 |
| □□□□□□ | | | 29 | 30 | 32 | 43 | 48 | 53 |
| □□□□ □□□□ | □ | | □□□□□□ | | | | | |
| | S-ON | | □□ Mode.1-6W□□□□□□□□□5□□□□□□□□□□ □□□□□□□ | | | | | |
| | □□ | | □□□□ | | | | | |
| AC□□ | □□ | | 220V±35□□110V + 35□□□□□ | | | | | |
| | □□ | | 50HZ□60HZ | | | | | |
| AC□□ | □□ | | 220V±3□□230V±3□240V±3□□100V±3□ □110V±3□□□□□ | | | | | |
| | □□ | | □□□□□□□□□□□□□□□□□□□□50Hz□60Hz□□□□ □DC / AC□□□□ | | | | | |
| □□□□ □□□□□“0”□□□□□□□□□ □□□□□□ | □□□□□□ □□□□□ | □□□□□□ | 1000W | 2000W | 3000W | 4000W | 5000W | 6000W |
| | | 12V | 35A | 65A | 75A | / | / | / |
| | | 24V | 20A | 35A | 45A | 65A | 70A | 75A |
| | | 48V | 10A | 15A | 30A | 35A | 40A | 50A |
| | □□□□ | | □□□□□□□□□□□1□□□□□2□□□□□ □□□□□□□□□□□□□□□□□□□□□□□□□□ □□□□□□ | | | | | |
| | □□□□ | | □□□□□□CC□CV□CF□ | | | | | |
| | □□□□ | | □□□□□□□□□□□ | | | | | |
| | □□□□ | | □□□□□□□□□□□□□□ □□ | | | | | |
| UPS □□ | □□ | | □□□□□□□□□ | | | | | |
| | □□ | | □□□□□□□□□ | | | | | |
| □□ | □□□□ | | LCD + LED | | | | | |
| | □□□□ | | □□ □□□□□ □□□□□ □□□□□ □□□□□ □□□□□ □□ | | | | | |
| □□□□ | | | □□□□ | | | | | |
| □□□□ | | | > 120□1□□□> 130□10□ | | | | | |
| □□ | □□□□ | | 1□6W | | | | | |
| | □□□□ | | 1□3A | | | | | |
| □□□□ | | | 87□□98□ | | | | | |
| □□□□ | | | <5□□□AC□DC / DC□AC□ | | | | | |
| □□ | | | □□ □□□□□□□ □□□ □□□ □□□□□ | | | | | |
| □□ | □□ | | -10℃□50℃ | | | | | |
| | □□ | | 10□□90□ | | | | | |
| | □□□□ | | ≤4000m | | | | | |

□□
ISO2008
ISO2004
CE-EMC
CE-LVD
FCC
□□RoHS
□□□□□
1□ OEM□ODM□□ □□□
□□□□□2□□□□□□□□□□
3.24□□□□;□□□□□□□□□□□□
4□□□□□□□□□□□□□□□□□□□□□□□□□□
5□□□□□□□□□□□□□□□□□□□□□□□□□□

□□□□□□□□□□□□ I-P-SMART2 MPPT□□□□□□