□□□□□□96V 192V 216V 240V 384V MPPT□□□□□□

Galaxy□□□□□□□□MPPT□□□□□□□□□□□□□□□MPPT□□□□□□□□□□□□□□□□□□□□□PV□□□□□□□□□□RS485□RS232□□□□□LAN□□□□□□□□□□□□□□□□□□□

Galaxy-B384-XXA	384V （32*12V）	850V	70a; 80a

□□

1.□□□□□□□MPPT□□□MPPT□□≥99.5□□□□□□□□□98□□
2.□□
3.□□□□□□□□□□□□□□/□□PV□□□□□□□□□□□□PV+□□□□□
4.□□□□□□□□□□□□□□□□\ gel \ flooded□□□□□FCUN□□□□□□□□□□□□□□□□□□□□□□□
5.□□□□□□□□□□□□□□□PV□□□□□□□□□□□□□□□□□□□

□□□□	□□VMAX-PV	DC430V			DC430V	DC430V	DC660V	DC660V	DC660V
	□□□□VSTART-PV	VBAT+20V	VBAT+20V	VBAT+20V	VBAT+20V	VBAT+20V	VBAT+20V	VBAT+20V	VBAT+20V
	□□□vlow-pv	VBAT+10V	VBAT+10V	VBAT+10V	VBAT+10V	VBAT+10V	VBAT+10V	VBAT+10V	VBAT+10V
	□□□□VOVE-PV	DC430V	DC430V	DC430V	DC430V	DC430V	DC660V	DC660V	DC660V
	□□□□□□□	7280W	8320W	10400	10400W \	12480W \	14560W \	16640W \	20800W \
					11700W \	14040W \	16380W \	18720W \	23400W \
					13000W	15600W	18200W	20800W	26000W
□□□□	□□□□□□□	□□□□□□□

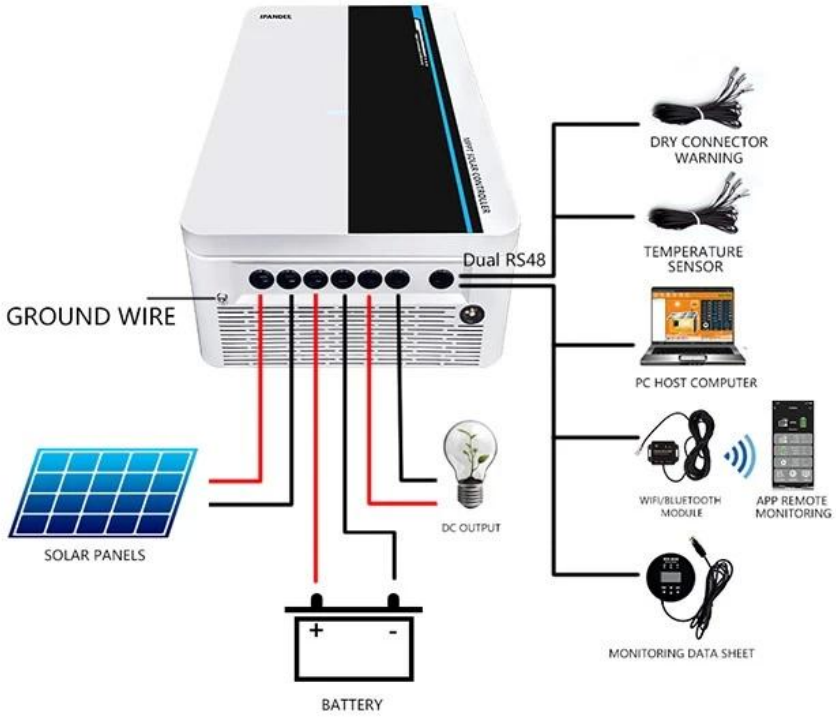
DRY CONNECTOR WARNING
TEMPERATURE SENSOR
Dual RS48
GROUND WIRE
PC HOST COMPUTER
WIFI/BLUETOOTH MODULE
APP REMOTE MONITORING
DC OUTPUT
SOLAR PANELS
MONITORING DATA SHEET
BATTERY

□□□□□

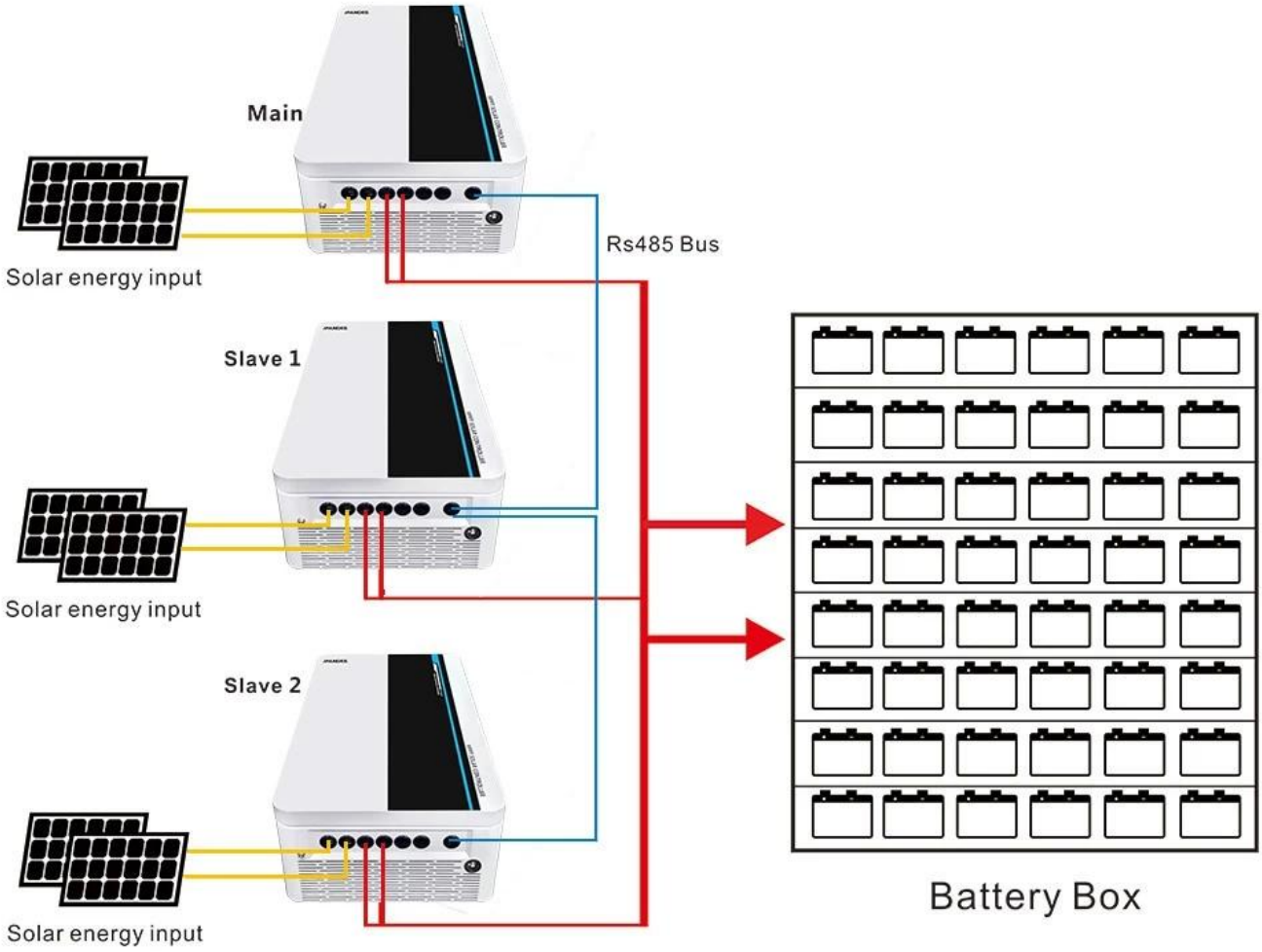
Main
Solar energy input
Rs485 Bus
Slave 1
Solar energy input
Slave 2
Solar energy input
Battery Box

□□□□□□□□□□□□□□□□□□□□□□□□□□□□□□□□□□□□