Application

1. Back-up UPS system for industrial,commercial, household,etc

2. Mobile power and standby power for areasthat are lack of utility.

3. Off-grid solar & wind power system

3.1 Simple Off-grid solar & wind powersystem

3.2 AC first Off-grid solar & windpower system

3.3 DC first Off-grid solar & windpower system

Features

1. pure sine wave output, full power

2. CPU management and control,modulardesign

3. LCD display,can visually display variousparameters

4. Multifunction design,can set a varietyof working mode

5. External battery connection, convenientto expand use time and back-up power time; user can connect as many batteriesas needed

6. With super load carrying ability andhigh load capacity, this series of inverters can not only drive resistance load; but also various kinds ofinductive loads, such as motor, air

conditioner, electric drills, fluorescentlamp, gas lamp, etc. It can drive almost any kinds of load.

7. Low frequency circuit design, goodsystem stability, low failure rate and long service life (under properoperation, it may be as long as 5 years)

8. Perfect protection: low voltageprotection, over voltage protection, overheat protection, short-circuitprotection, overloads protection; alarm alert

9. CE / EMC / LVD/ RoHS Approvals.

10. Two years warranty, life-long technicalsupports

Function

1. Sole inversion function under inversion mode only connected to battery ,can be set to normal operatingmode and sleep mode.

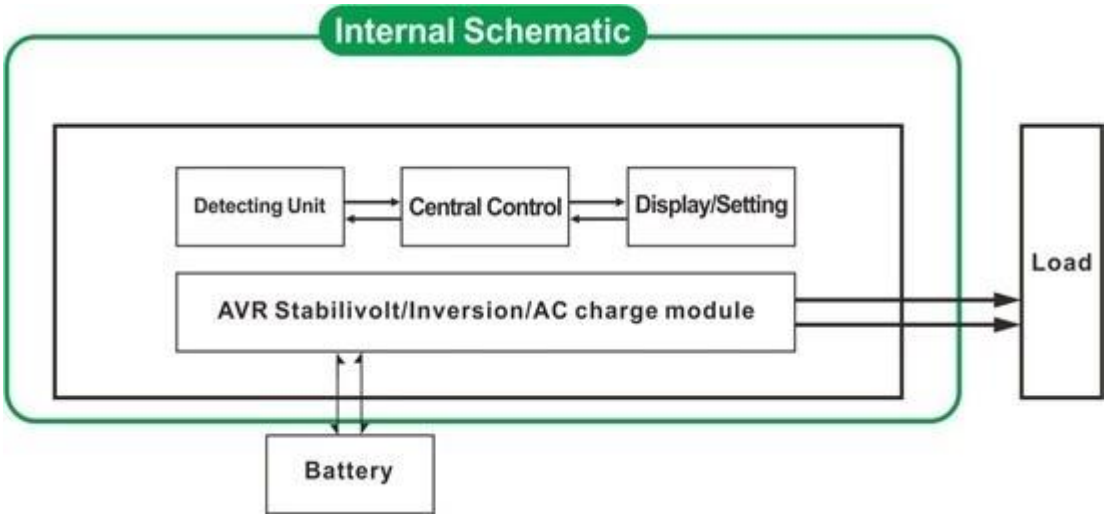

1.1 Normal working mode：FREQUNCY in the LCD display is setas 01. No matter whether there are AC loads connected to the inverter or not,the inverter’s output terminal will always have voltage ready to supply powerto the loads. Under this mode, the LCD will be displayed as bellow:

1.2 Sleep mode：FREQUNCY in the LCD display is setas 02. If the power of the loads that connected to the inverter is lower than5% of the inverter’s rated power, there will be no output from the inverter.That is to say, only the chip of inverter is working under such condition andthe power consumption is only 1-6W; If the power of the loads that connected tothe inverter is higher than 5% of the inverter’s rated power, then the inverterwill automatically start the inversion function and supply power to the loadswithin 5s. As shown below:

Load’s power＜5% of inverter’s rated power

Load’s power＞5% of inverter’s rated power

2. UPS function under utility mode(connected to battery and utility .Can be set as utility first, battery standby mode and battery first, utility standby mode).

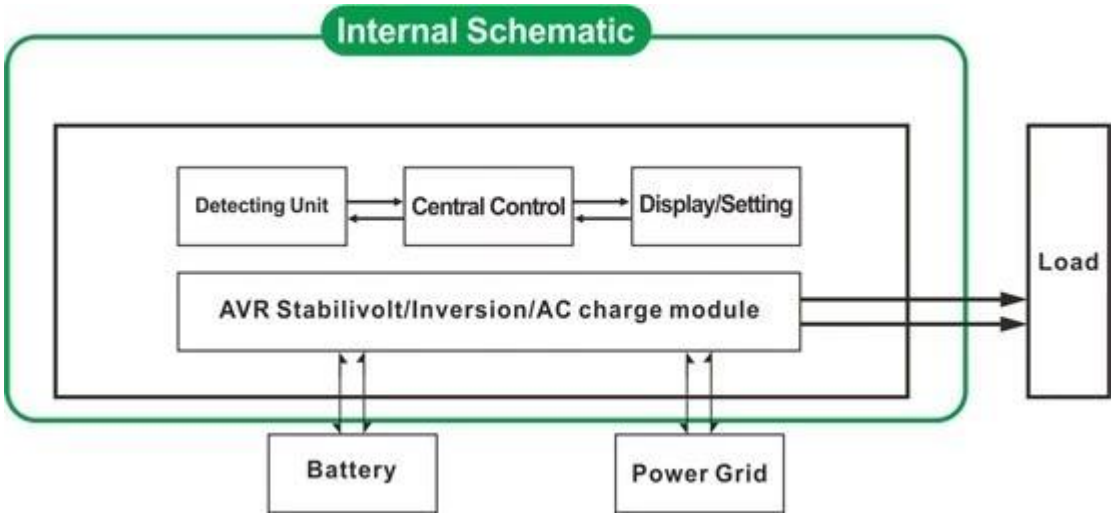

2.1 Utility first, battery standby UPSmode: FREQUENCY in the LCD display is set as 01. When both utility and batteryare connected to the inverter, utility will supply power to the loads prior tothe battery. When utility is cut off, the battery will automatically continueto supply power after inversion.

Steps are as follows:

Step 1: When utility power is available, itwill output directly after voltagebeing stabilized and charge batteries at thesame time.

Step 2: When utility power is cut offsuddenly, the inverter will convert DC power to AC power automatically toensure uninterrupted power supply within 5ms.

Step 3: When utility power becomesavailable again, it will automatically transfer to utility supplying power toloads and charge batteries at the same time.

See Workflow as below:

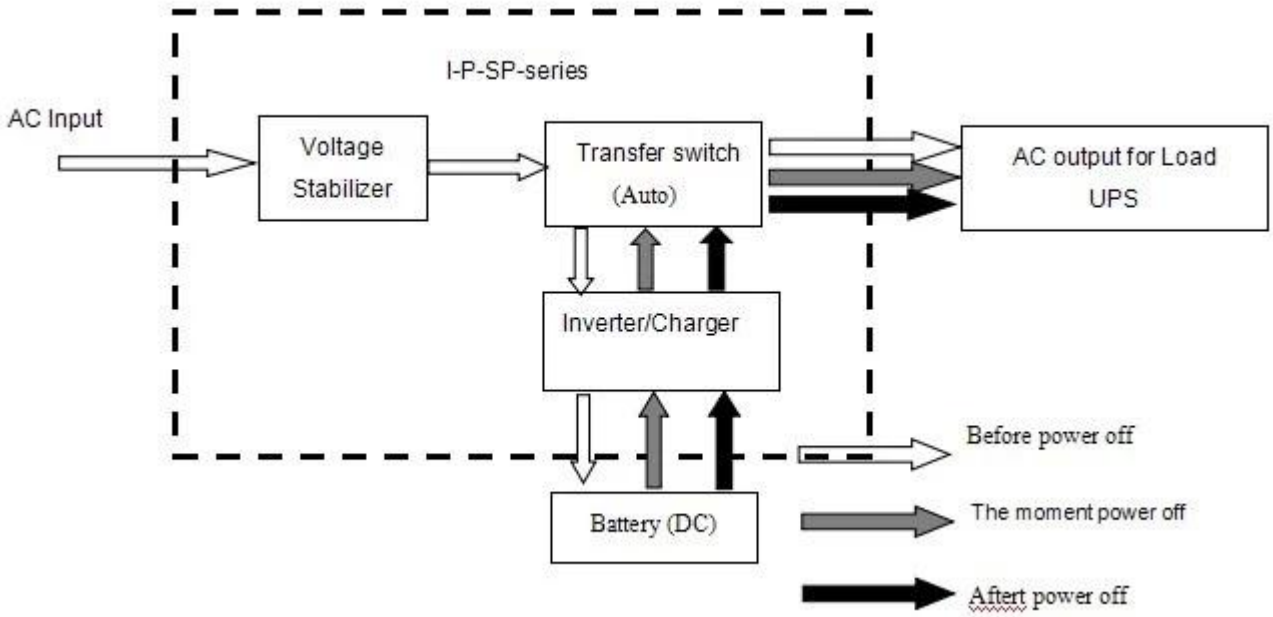

LCD displayed as bellow:

Utility supply power and charge battery

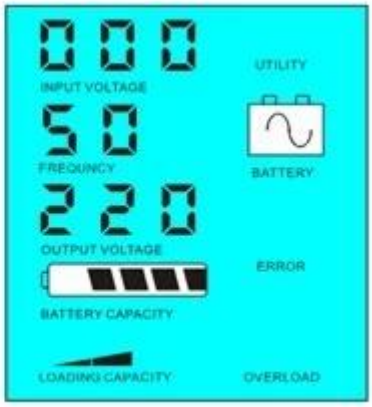

Without utility and battery supply power

2.2 Battery first, utility standby UPSmode: FREQUENCY in the LCD display is set as 03. When both utility and battery are connectedto the inverter, battery will supply power to the loads prior to utility. Whenbattery capacity is not enough, utility will continue to supply powerautomatically.

Steps are as follows:

Step 1: When battery has enough power, itwill supply power to the loads directly

Step 2: When battery does not have enoughpower, it will automatically transfer to utility supplying power to the loads

Step 3: After the battery is fully charged(e.g. by solar or wind charge controller), it will then automatically transferto battery supplying power to the loads.

See Workflow as below.

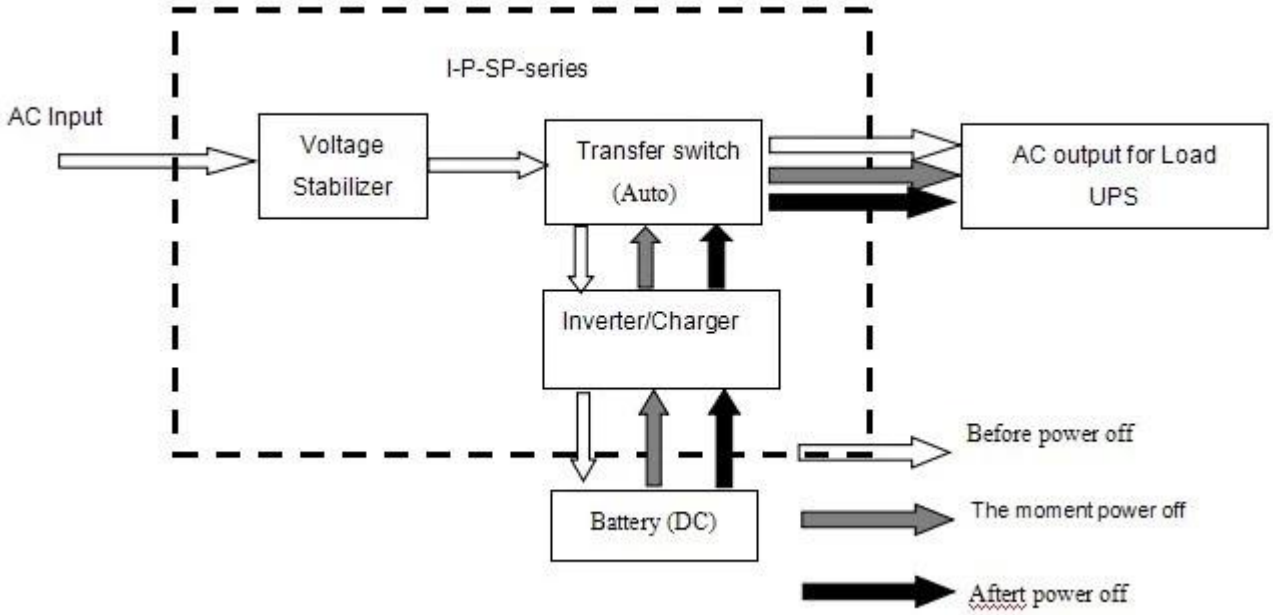

LCD displayed as bellow :

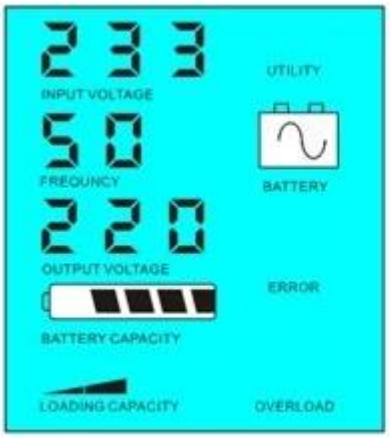

Battery has power

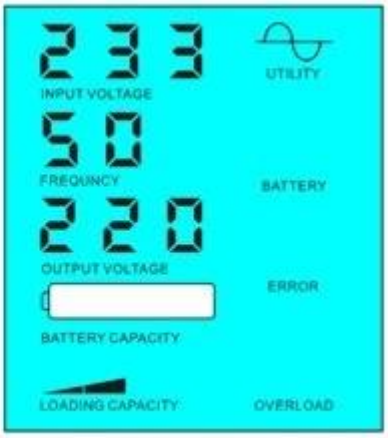

Battery dead, utility supply power

Parameter

Model Parameter		20KVA
Rated Output Capacity		15000W
Peak Power		30000W
Battery Voltage(DC)		192V
Size W×D×H(mm)		420*280*625
Packing Size W×D×H(mm)		440*300*645
Net Weight (kg)		105
Gross Weight (kg)		115
General Parameter		
Working Mode	1	Utility First, Battery Standby
Setting	2	Sleep Mode,no utility,load’s power higher than 5% of rated power, start to work automatically
	3	Battery first, utility standby
AC Input	Voltage	220V±35% or 110V+35%optional
	Frequency	50Hz±3% or 60Hz±3% optional
AC Output	Voltage	220V±3% or 230V±3 or 240V±3% or 100V±3%
		or 110V±3% (optional)
	Frequency	50Hz±0.5 or 60Hz±0.5 (optional)
Battery charge	AC Charge Current	0~15A
	Charge Time	Depend on battery capacity and quantity
	Battery Protection	Automatic detection, Charge and discharge protection,Intelligent Management
Display	Display Mode	LCD
	Display Information	Input voltage,output voltage,output frequency,battery capacity,Load condition,Status Information
Output Wave Type		Pure sine wave output,waveform distortion rate≤3
Overload Ability		120% 1 min,130% 10s
Power Consumption	Sleep Mode	1~6W
	Normal Mode	1~3A
Conversion Efficiency		80%~90%
Transfer Time		5ms AC to DC / DC to AC

Protection		Overload output,short-circuit,high-voltage input,low-voltage input,overheat
Environment	Temperature	-10℃□50℃
	Humidity	10%□90%
	Altitude	≤4000m

Remark

The “optional” parameter can be set as percustomer’s requirement

The above is our standard parameter.Subject to change without prior notice.

We have our own professional inverter andcontroller R&D team and we provide technical support and OEM service.

Others

Please refer to the outline design,technical documents, product brochures, etc.

Made by Engineering Department May 5, 2014 2nd Edition