Introduction

This series of product is a module design of inverter and built-in MPPT controller, which has the advantages of high conversion efficiency, low power consumption and strong load-carrying ability. With intelligent control, customers can set charging mode, (Utility as complementary power) AC first mode or DC first mode, timed inversion mode and timed utility mode, timed on/off sleep mode. This is the currently the most advanced inverter & controller hybrid in the world.

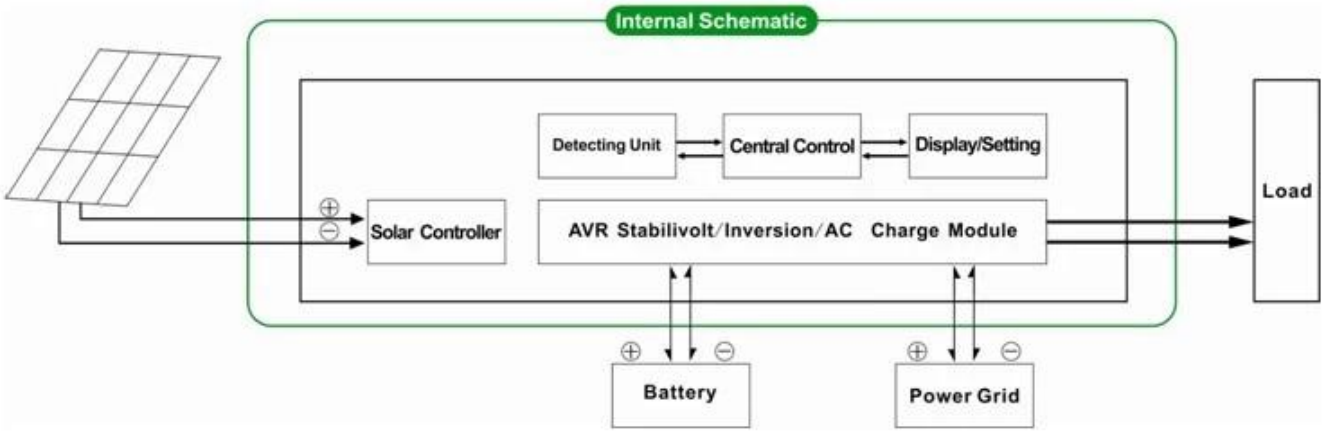

Feature

1.Easy to install. To configure a solar system, customers only need to connect it with solar panels and batteries

2.CPU management ,intelligent control modular design, User-friendly LCD display

3.Built-in MPPT controller, high charging efficiency

4.Low power consumption, high conversion efficiency

5.Intellectual multi-function, convenient for customers with different using environment to fully use the solar energy

6.External battery connection, convenient to expand back-up power time

7.Strong load-carrying ability, low failure rate, easy maintenance and long service life (under proper operation, it may be as long as 5 years)

8.Perfect protection: low voltage protection, over voltage protection, overheat protection, short-circuit protection, overloads protection

9.CE / EMC / LVD/ RoHS Approvals

10.Two years warranty, life-long technical supports

Function

1.Charging function

There are 2 modes as shown bellow:

2. Utility as complementary power function

There are 2 kinds of complementary modes, shown as bellow:

2.1 AC first , DC standby UPS mode

When both utility and battery are connected to the machine, utility will supply power to the loads prior to the battery. When utility is cut off, the battery will automatically continue to supply power.

Steps are as follows:

Step 1: When utility power is available, it will output directly after voltage being stabilized and charge batteries at the same time.

Step 2: When utility power is cut off suddenly, the inverter will convert DC power to AC power automatically to ensure uninterrupted power supply within 5ms.

Step 3: When utility power becomes available again, it will automatically transfer to utility supplying power to loads and charge batteries at the same time.

See Workflow as below:

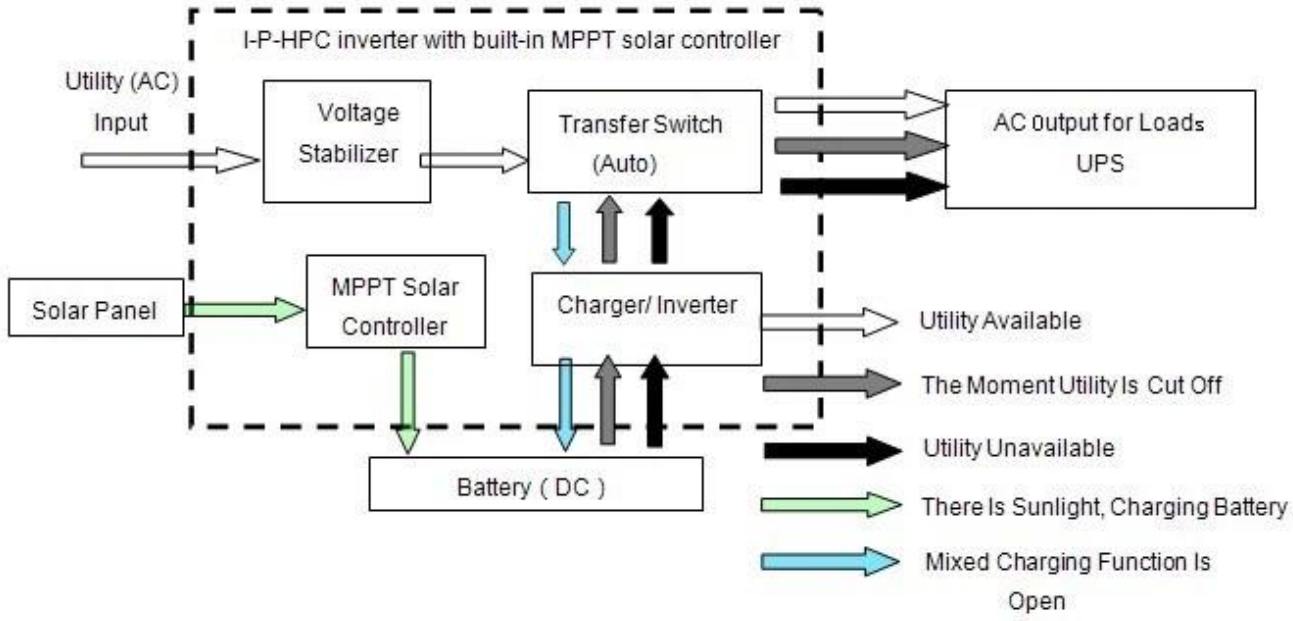

2.2 DC first, AC standby UPS mode:

When both utility and battery are connected to the inverter, battery will supply power to the loads prior to utility. When battery capacity is not enough, utility will continue to supply power automatically.

Steps are as follows:

Step 1: When battery has enough power, it will supply power to the loads directly

Step 2: When battery does not have enough power, it will automatically transfer to utility supplying power to the loads

Step 3: After the battery is fully charged (e.g. by solar or wind charge controller), it will then automatically transfer to battery supplying power to the loads.

See Workflow as below.

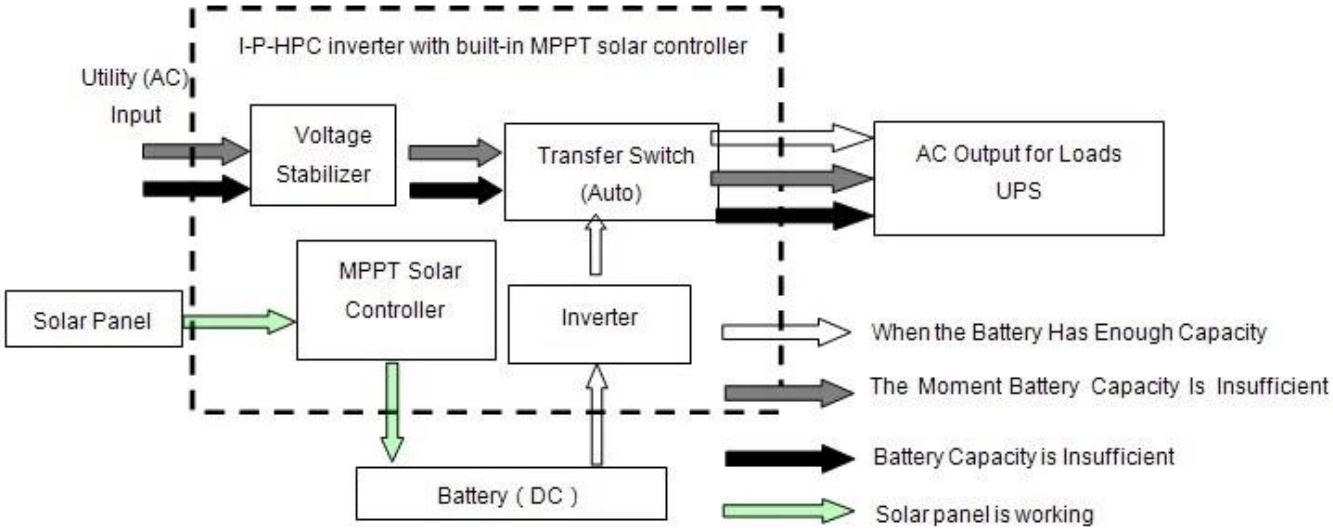

3. Timing function

There are 2 kinds of timing mode:

3.1 Timed on/off normal working mode and sleep mode: can set specific time when to open normal output and when to close AC output to enter sleep mode.

3.2 Battery and utility switchable mode: can set specific time when to use battery or utility supply power (suitable for areas where electric fee is charged according to period in different intervals)

4. Recording/checking function

4.1 Machine fault checking: can check the machine fault information

4.2 Discharge time checking: can check the discharge time of the battery

Parameter

Model Parameter		3000W
Rated Output Power		3000W
Peak Power		6000W
Battery (Lead-acid battery)		24V/48V(optional)
Charging Parameter		
Charge Mode(setting)		PV charge
		PV charge + utility charge
MPPT Solar Controller	Voltage	24V/48V
	Current	40A
	Max PV Input Voltage	100V
	PV Charge Efficiency	95%~99%
	Max PV Input Power	24V:1136W
		48V: 2272W
Utility	AC Charge Current	0~15A
	Charge Mode	3-Stage Charging
Inversion parameter		
AC Output	Voltage	220V±3% or 230V±3 or 240V±3% or 100V±3% or 110V±3% (optional)
	Frequency	50Hz±0.5 or 60Hz±0.5 (optional)
Output wave type		Pure sine wave output, waveform distortion rate≤3
Overload ability		120% 1 min, 130% 10s
Power Consumption (under normal working mode)		24V: 0.7A
		48V: 0.5A
Power Consumption (under sleep mode)		1-6W
Inverter Conversion Efficiency		85%~92%
Utility Mode		
AC Input	Voltage	220V±35% or 110V+35%(optional)
	Frequency	The same as utility
AC Output	Voltage	220V±5% or 110V+5%(optional)
	Frequency	The same as utility
Overload Ability		120% 1 min,130% 10s
(AC first or DC first) priority		
UPS Output(setting)		AC first, DC standby
		DC first, AC standby
Switch Time		5ms (AC to DC / DC to AC)
Power On (setting)		Set by users
		Timed open / close AC output automatically
General Parameter		

Display	Display Mode	LCD+LED
	Display Information	Input voltage, output voltage, output frequency, battery capacity, Load condition, Status Information
Protection		Overload output, short-circuit, high-voltage input, low-voltage input, overheat
Environment	Temperature	-10℃□50℃
	humidity	10%□90%
	Altitude	≤4000m
Size W×D×H(mm)		438*208*413
Packing Size W×D×H(mm)		520*310*460
Net Weight (kg)		25
Gross Weight (kg)		27

Remarks:

- The “optional” parameter can be set as per customer’s requirement
- The above is our standard parameter. Subject to change without prior notice.
- We have our own professional inverter and controller R&D team and we provide technical support and OEM service.

Connection Diagram

Others

- Please refer to the outline design, technical documents, product brochures, etc.
- Made by Engineering Department, May 15, 2014, 2nd Edition