This power inverter series I-P-TPI2-1000W-6000W is adopted the world's leading low frequency inversion
technical solutions This series of inverter has the advantages of high conversion efficiency, low power consumption, super load-carrying ability, and large charging current. . Users can set it to sleep mode and normal
working mode according to the AC loads. Users also can set the output priority (AC first or DC first) and choose
the output frequency 50Hz or 60Hz. It's our second generation TPI series. They are best choice for solar, wind
generation system, home, office standby UPS power supply and DC to AC projects, keep 24hours have power.
In the above application fields, this series of inverter is suitable for all kinds of inductive loads, capacitive load and
resistive load such as TV, air conditioner, refrigerator and washing machine.

Application

Industrial, commercial, household back-up power supply
Movable AC supply power
Main supply power for industrial products
Off-grid energy generator system

Function

1.DC/AC Conversion Function

It can be set to normal working mode (on the panel turn the button to “ON”) or sleep mode (on the panel turn the
button to S-ON)

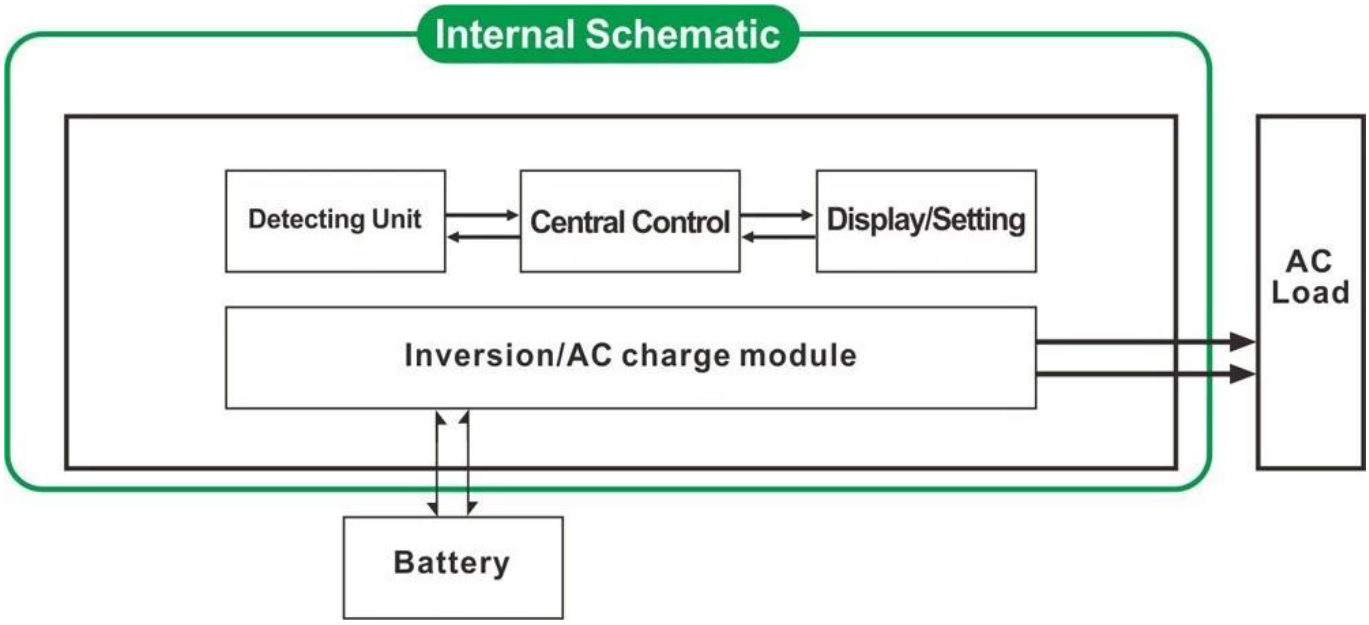

1.1 Normal working mode (ON): No matter it’s connected AC loads or not
the inverter always convert DC to AC. The LCD of the inverter display the output voltage. The power consumption
in normal working mode is a little higher than in sleep mode
1.2 Sleep mode (S-ON)If the power of the connected AC loads is lower than 5% of the rated power of the
inverter, there is no output from the inverter. The LCD of it shows 0. Only the chip of inverter is working. The
power consumption of the inverter is only 1-6W. If the power of the connected AC loads is more than

5%, then
the inverter automatically convert DC to AC to supply power for the loads within 5s. The LCD of it display no
output.

2. High-power intelligent charging function

1It Can charge 8 kinds of batteries (detail please check parameter)
2High charging power (detail please check parameter)
3Three-stage charging mode: Constant current charging stage (CC), Constant voltage charging stage (CV),
Float charging stage (CF)

Note: When the battery type is set to “0”, it will not charge the battery and charging current is “0”. The charging
indicator will not light.

3. UPS function

It can be set as utility first (AC first) battery standby mode or battery first (DC first) utility standby mode.

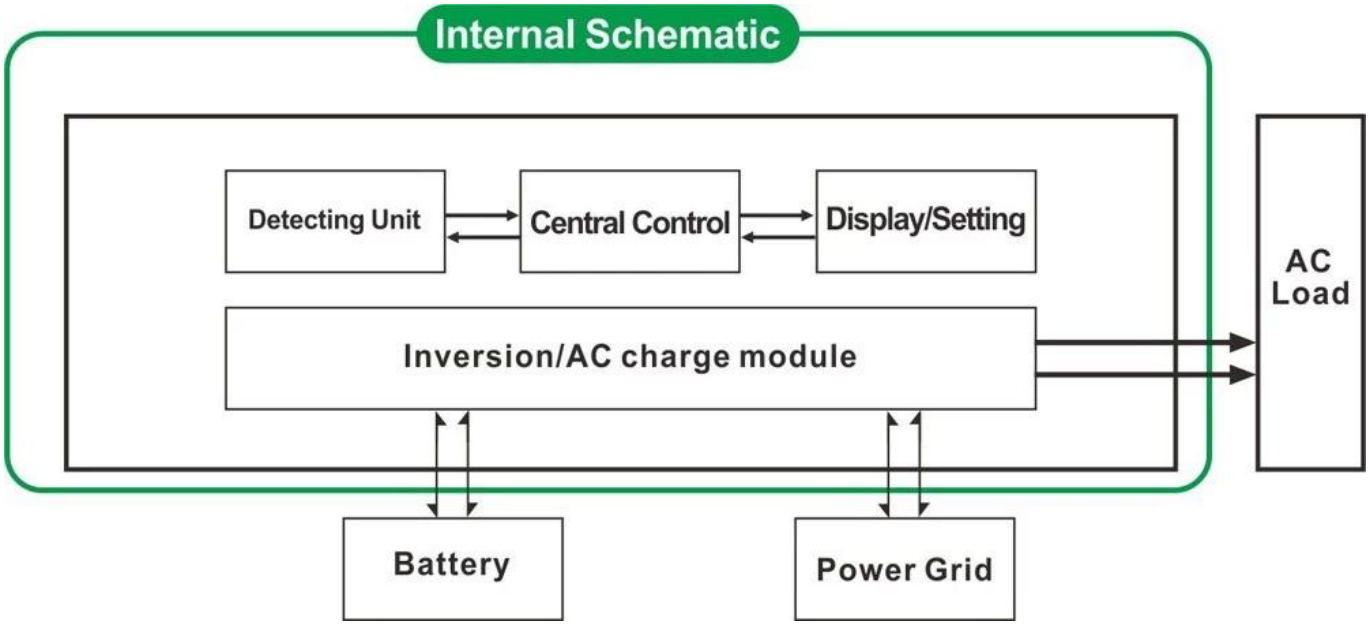

3.1. Utility first, battery standby UPS mode (on the panel turn the button to "AC")
3.2. Battery first, utility standby UPS mode (on the panel turn the button to "DC").

Features

1. Pure sine wave output
2. CPU management, intelligent controlmodular design
3. LCD and LED display can show the parameters and inverter working status.
4. Users can set it in sleep mode or normal working mode and set output priority (AC first or DC first). The output
frequency (50Hz or 60Hz) can be chosen.

5. High conversion efficiency (87%-98%), low power consumption (1W~6W under sleep mode). It is the best
choice of inverters for solar power system
6. The inverter can charge 8 kinds of batteries such as sealed lead acid battery, open lead-acid battery, gel
battery. Kindly note: The lithium battery can be charged also, the related parameters need to be set in factory.
7. High charging power and the charging function can be closed
8. This series of inverters have strong load-carrying ability and overload capacity. The peak power is 3 times of
the rated output power. For example, 1KW model can drive 1HP air conditioner, 2KW model can drive 2HP air
conditioner, 3KW can drive 3HP conditioner.
9. Adopting the latest American low frequency circuit design, brand new imported electric materials, pure copper
transformer, the system is very stable long service life(more than 5 years under normal use)
10. Perfect protection (low input voltage protection, high input voltage protection, over temperature protection,
short-circuit protection, overload protection)
11. EMC、LVD、RoHS certification approvals
12. 2-year warranty and life-time technical assistance.

Specification

Parameter Model		3000W		
Rated Output Power		3000W		
Peak Power		9000W		
Battery Voltage(DC)		12V or 24V or 48V（optional）		
Size W×D×H(mm)		318*218*368		
Packing Size W×D×H(mm)		395*275*520		
Net Weight (kg)		30		
Gross Weight (kg)		32		
Working Mode（Setting）	ON	Normal working mode		
	S-ON	Sleep Mode, 1~6 consumption when load’s power higher than 5% rated output power, it will start to work automatically		
	OFF	Completely off		
AC Input	Voltage	220V±35% or 110V+35%（optional）		
	Frequency	50HZ or 60HZ		
AC Output	Voltage	220V±3% or 230V±3 or 240V±3% or 100V±3% or 110V±3%（optional）		
	Frequency	frequency is the same as Under utility mode Frequency 50Hz or 60Hz（optional) in DC/AC convert mode		
Utility charging（Battery type “0” means that AC charging function is closed）	AC charge current（MAX）	12V	24V	48V
		75A	45A	30A
	Battery type	American gel battery, Wool battery 1, Wool battery2, Sealed Lead Acid Battery, Europe gel battery, Open lead-acid batteries, Calcium Battery, De-Acid Battery or OEM Battery		
	Charging mode	Three-stage charging: CC, CV, CF		
	Charging time	Decided by battery capacity and quantity		
	Battery protection	Automatic detection, charge and discharge protection, intelligent management		

UPS priority	AC	Utility first, battery standby
	DC	Battery first, utility standby
Display	Display Mode	LCD+LED
	Display Information	Input voltage□output voltage□output frequency□battery capacity□Load condition□Status Information
Output Wave Type		Pure sine wave
Overload Ability		□120% 1 min, □130% 10s
Power Consumption	Sleep Mode	1~6W
	Normal Mode	1~3A
Conversion Efficiency		87%~98%
Transfer Time		□5ms □AC to DC / DC to AC□
Protection		Overload output, short-circuit, high-voltage input, low-voltage input, overheats
Environment	Temperature	-10℃□50℃
	Humidity	10%□90%
	Altitude	≤4000m

Certificates

MS CERT

Certificate Of Registration

QUALITY MANAGEMENT SYSTEM

This is to Certify that the Quality Management System
of

SHENZHEN I-PANDA NEW ENERGY TECHNOLOGY & SCIENCE CO., LTD.

Address:
Block H, Juyin Technology Industrial Park, Buji St., Longgang Dist., Shenzhen, 518000, Guangdong, China.

has been assessed and found to comply with the requirements of:

ISO 9001:2008

(Quality Management System)

Clause 7 permissible Exclusions: Nil

Scope of Certification:

Design, Production and Sales of Power Inverter, Solar Controller, Solar Generator System and UPS.

Sector Code: (ANZSIC CODE: 2859)

Certificate Number: CHIN/TW/QMS/00119

Issue no.: 01

Date of approval : 05.07.2014
Revision no: nil

Valid until : 04.07.2017
Revision date : nil

Original Certification Date: 05.07.2014

May 2015

Surveillance Audit 1st Year

Managing Director

May 2016

Surveillance Audit 2nd year

MS CERTIFICATION SERVICES PVT. LTD.

www.mscertification.net

The Certificate is Valid Only if the Annual Surveillance Mark is Signed by Auditor on Original.

MS CERT

Certificate Of Registration

ENVIRONMENTAL MANAGEMENT SYSTEM

This is to certify that the Environmental Management System

of

SHENZHEN I-PANDA NEW ENERGY TECHNOLOGY & SCIENCE CO., LTD.

Address:

Block H, Juyin Technology Industrial Park, Buji St., Longgang Dist., Shenzhen, 518000, Guangdong, China.

has been assessed and found to comply with the requirements of:

ISO 14001:2004

(Environmental Management System)

Scope of Certification:

Design, Production and Sales of Power Inverter, Solar Controller, Solar Generator System and UPS.

Sector Code: (ANZSIC CODE: 2859)

Certificate Number: CHIN/TW/EMS/00028

Issue no.: 01

Date of approval : 05.07.2014
Revision no: nil

Valid until : 04.07.2017
Revision date : nil

Original Certification Date: 05.07.2014

May 2015

Surveillance Audit 1st Year

Managing Director

May 2016

Surveillance Audit 2nd year

MS CERTIFICATION SERVICES PVT. LTD.

www.mscertification.net

The Certificate is Valid Only if the Annual Surveillance Mark is Signed by Auditor on Original.

Best Service of Testing
since2003

Certificate of Compliance

Certificate NO. : **BST14050326Y-1EC-1**

Applicant	:	**SHENZHEN I-PANDA NEW ENERGY TECHNOLOGY & SCIENCE CO., LTD.** Bolck H, Juyin Technology Industrial Park, Buji St., Longgang Dist., Shenzhen, Guangdong, China
Manufacturer	:	**SHENZHEN I-PANDA NEW ENERGY TECHNOLOGY & SCIENCE CO., LTD.** Bolck H, Juyin Technology Industrial Park, Buji St., Longgang Dist., Shenzhen, Guangdong, China
Product Name	:	**PURE SINE WAVE INVERTER WITH CHARGER AND UPS**
Trade Name	:	**I-PANDA**
Main Test Model	:	**I-P-TPI-6000W**
Additional Model	:	**I-P-TPI-1000W, I-P-TPI-2000W, I-P-TPI-3000W, I-P-TPI-4000W, I-P-TPI-5000W**
Test Standard	:	**EN 55022:2010** **EN 61000-3-2:2006+A1:2009+A2:2009** **EN 61000-3-3:2013** **EN 55024:2010**
As shown in the Test Report No.	:	**BST14050326Y-1ER-1.**

The EUT described above has been tested by us with the listed standards and found in compliance with the council EMC directive 2004/108/EC. It is possible to use CE marking to demonstrate the compliance with this EMC Directive.
The certificate applies to the tested sample above mentioned only and shall not imply an assessment of the whole production.

CE

APPROVED

Christina
Manager
May 20, 2014

Shenzhen BST Technology Co.,Ltd.
Add: Building No.23-24, Zhiheng Industrial Park, Guankouer Road, Nantou,Nanshan District,Shenzhen,Guangdong,China
Certificate Search: http://www.bst-lab.com, Tel:400-882-9628, 8009990305, E-mail:christina@bst-lab.com

Best Service of Testing
since2003

Certificate of Compliance

Certificate NO.	:	**BST14050326Y-1SC-2**
Applicant	:	**SHENZHEN I-PANDA NEW ENERGY TECHNOLOGY & SCIENCE CO., LTD.** Bolck H, Juyin Technology Industrial Park, Buji St., Longgang Dist., Shenzhen, Guangdong, China
Manufacturer	:	**SHENZHEN I-PANDA NEW ENERGY TECHNOLOGY & SCIENCE CO., LTD.** Bolck H, Juyin Technology Industrial Park, Buji St., Longgang Dist., Shenzhen, Guangdong, China
Product Name	:	**PURE SINE WAVE INVERTER WITH CHARGER AND UPS**
Trade Name	:	**I-PANDA**
Main Test Model	:	**I-P-TPI-6000W**
Additional Model		**I-P-TPI-1000W, I-P-TPI-2000W, I-P-TPI-3000W, I-P-TPI-4000W, I-P-TPI-5000W**
Test Standard	:	**EN 60950-1:2006+A11:2009+A1:2010+A12:2011**
As shown in the Test Report No.	:	**BST14050326Y-1SR-2**

The EUT described above has been tested by us with the listed standards and found in compliance with the council LVD directive 2006/95/EC. It is possible to use CE marking to demonstrate the compliance with this LVD Directive.

The certificate applies to the tested sample above mentioned only and shall not imply an assessment of the whole production.

SHEN BST TECHNOLOGY CO., LTD. APPROVED

Christina
Manager
May , 25, 2014

Shenzhen BST Technology Co., Ltd.
Add:Building No.23-24,Zhiheng Industrial Park,Guankouer Road,Nantou,Nanshan District,Shenzhen,Guangdong,China
Certificate Search: http://www.bst-lab.com, Tel: 400-882-9628, 8009990305, E-mail:christina@bst-lab.com

Best Service of Testing
since2003

FCC VERIFICATION OF CONFORMITY

BST14050326Y-1EC-3

We herewith confirm the following designated product:

Product Name: PURE SINE WAVE INVERTER WITH CHARGER AND UPS
Trade Name: I-PANDA
Main Test Model. : I-P-TPI-6000W
Additional Model: I-P-TPI-1000W, I-P-TPI-2000W, I-P-TPI-3000W, I-P-TPI-4000W, I-P-TPI-5000W

(Product Identification)

has been tested and found in compliance with the requirements of 47 CFR PART 15 regulation & ANSI C63.4 for the evaluation of Class B of electromagnetic compatibility. It is only valid in connection with the test report number: BST14050326Y-1ER-3.

This device complies with Part 15 of the FCC rules,operation is subject to the following two conditions:

(1) this device may not cause harmful interference, and
(2) this device must accept any interference received, including interference that may cause undesired operation.

(Identification of regulations/standards)

This declaration is the responsibility of the manufacturer/importer

SHENZHEN I-PANDA NEW ENERGY TECHNOLOGY & SCIENCE CO., LTD.
Bolck H, Juyin Technology Industrial Park, Buji St.,
Longgang Dist., Shenzhen, Guangdong, China

(Name /Address)

MANUFACTURER / IMPORTER

TEST LABORATORY

This is the results of test that was carried out by Shenzhen BST. from the submitted type samples of the product is in conformity with the specification of the respective standards.
The certificate holder has the right to fix the FCC-mark on the product complying with the required rules.

APPROVED

Christina
Manager
May 20, 2014

Shenzhen BST Technology Co.,Ltd.
Add: Building No.23-24, Zhiheng Industrial Park, Guankouer Road, Nantou,Nanshan District,Shenzhen,Guangdong,China,
Certificate Search: http://www.bst-lab.com, Tel:400-882-9628, 8009990305, E-mail:christina@bst-lab.com

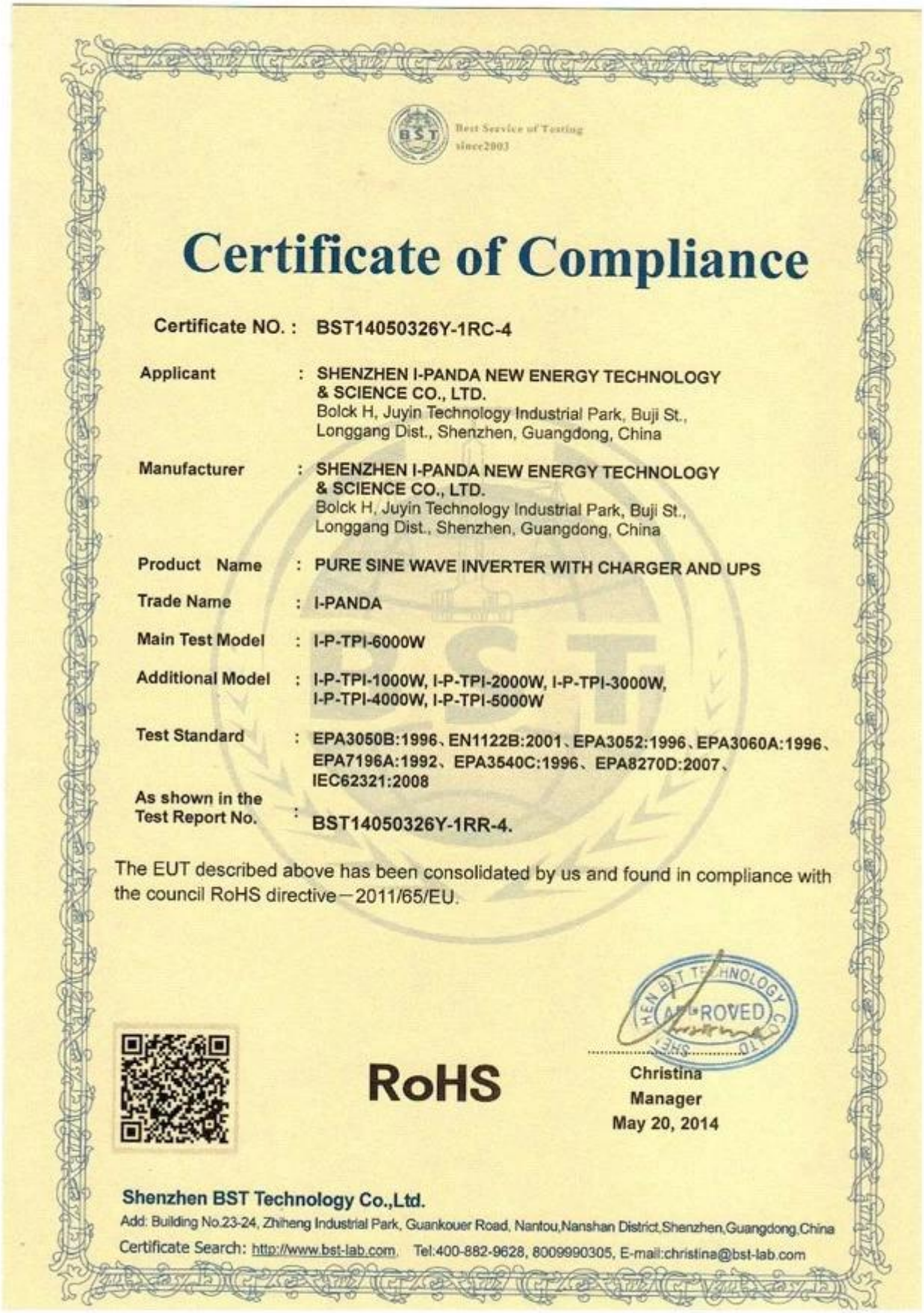

Best Service of Testing
since2003

Certificate of Compliance

Certificate NO. : BST14050326Y-1RC-4

Applicant	:	SHENZHEN I-PANDA NEW ENERGY TECHNOLOGY & SCIENCE CO., LTD. Bolck H, Juyin Technology Industrial Park, Buji St., Longgang Dist., Shenzhen, Guangdong, China
Manufacturer	:	SHENZHEN I-PANDA NEW ENERGY TECHNOLOGY & SCIENCE CO., LTD. Bolck H, Juyin Technology Industrial Park, Buji St., Longgang Dist., Shenzhen, Guangdong, China
Product Name	:	PURE SINE WAVE INVERTER WITH CHARGER AND UPS
Trade Name	:	I-PANDA
Main Test Model	:	I-P-TPI-6000W
Additional Model	:	I-P-TPI-1000W, I-P-TPI-2000W, I-P-TPI-3000W, I-P-TPI-4000W, I-P-TPI-5000W
Test Standard	:	EPA3050B:1996、EN1122B:2001、EPA3052:1996、EPA3060A:1996、EPA7196A:1992、EPA3540C:1996、EPA8270D:2007、IEC62321:2008
As shown in the Test Report No.	:	BST14050326Y-1RR-4.

The EUT described above has been consolidated by us and found in compliance with the council RoHS directive－2011/65/EU.

SHEN BST TECHNOLOGY CO.,LTD. APPROVED

RoHS

Christina
Manager
May 20, 2014

Shenzhen BST Technology Co.,Ltd.
Add: Building No.23-24, Zhiheng Industrial Park, Guankouer Road, Nantou,Nanshan District,Shenzhen,Guangdong,China
Certificate Search: http://www.bst-lab.com. Tel:400-882-9628, 8009990305, E-mail:christina@bst-lab.com

Service

1. OEM and ODM orders are provided.
2. Power solution consult available based on technical group
3. 24 months warranty; lifelong time extended technical service.

4. Any of your questions will be guided by professional technical team.
5. Free technical study and discussion on products are provided every year.