I-P-SPC Power Inverter with Built-in Solar Charge Controller 2000W

Application

1)Off-grid solar power system

2) Utility and solar complementary powergeneration system

Features

1)Easy to install. To configure a solar system, users just need to connect itwith solar panels and batteries.

2)CPUmanagement,Intelligent control,modular design

3)LEDsLCD display. LCD can display various parameters(such as the output voltage,frequency, working mode)

4)Multifunctiondesign, AVR UPS function. Users don’t need to buy solar, controller, AC charger or stabilizer.

5)External battery connection, it’s convenient for users to expand use time andback-up power time

6)Withsuper load-carrying ability and high load capacity, this series of inverters can not only drive resistance load; but also various kinds ofinductive loads such as motor, air conditioner, electric drills, fluorescentlamp, gas lamp. It can drive almost any kinds of load

7)Lowfrequency pure sine wave circuit design, stable quality, easy to maintenance,low failure rate and long service life (under proper operation, it can last atleast 5 years)

8)Perfect protection: low voltage protection, high voltage protection, overtemperature protection, short-circuit protection, overload protection

9) CE/ EMC / LVD/ RoHS /FCC approvals

10) 2years warranty, life-long technical support

Off-grid solar power system

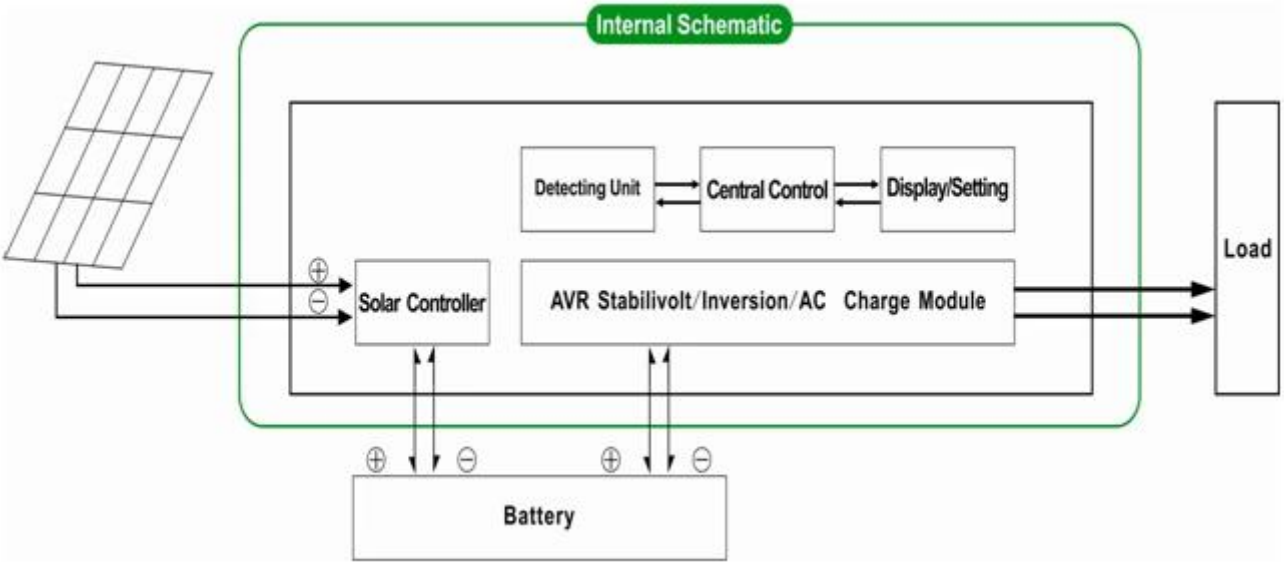

Utilityand solar complementary power generation system

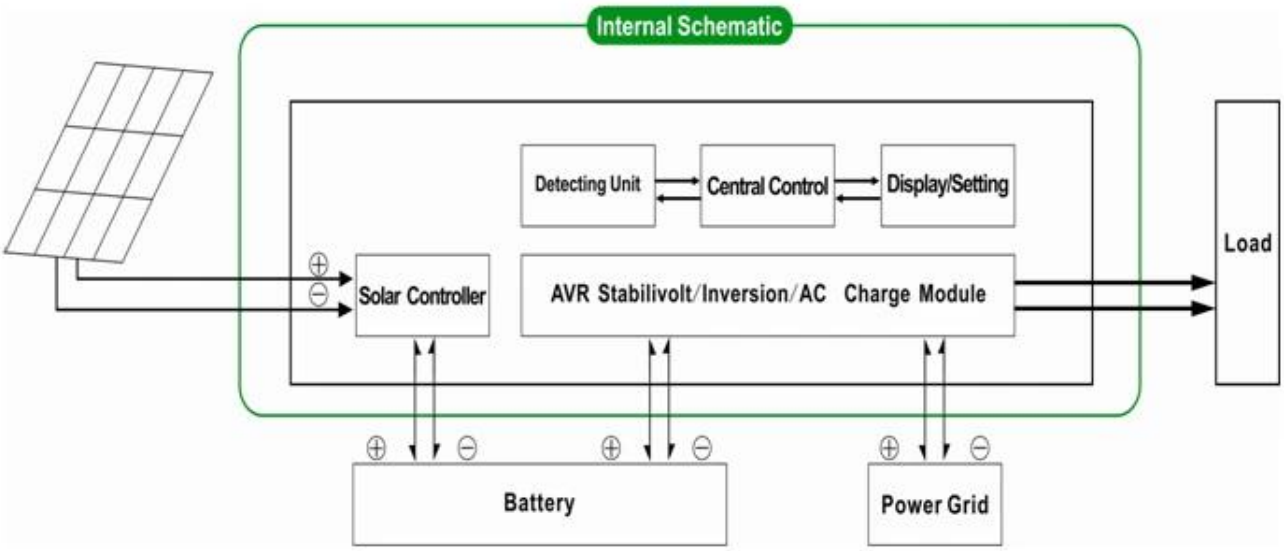

Parameter

Mode	3000VA
Rated Output Capacity	2000W
Peak Power	4000W
Battery Voltage(DC)	24V or 48V

PWM Solar Controller	Voltage	24V or 48V
	Current	30A
	PV Max Input Voltage	24V System□50V
		48V System□100V
Size W×D×H(mm)		350*220*460
Packing Size W×D×H(mm)		370*240*480
Net Weight (kg)		23
Gross Weight (kg)		25
General Parameter		
Working Mode (Setting)	1	Utility first (AC first) battery standby mode
	2	Sleep Mode,no utility,load’s power is over 5% of rated output power, Inverter start to work automatically
	3	Battery first (DC first)utility standby mode
AC Input	Voltage	220V±35% or 110V+35%□Optional□
	Frequency	50Hz±3% or 60Hz±3% □Optional□
AC Output	Voltage	220V±3% or 230V±3 or240V±3% or 100V±3% or 110V±3% (Optional)
	Frequency	50Hz±0.5 or 60Hz±0.5 (Optional)
Utility charge	AC Charge Current	0~15A
	Charge Time	Depend on battery capacity and quantity
	Battery Protection	Automatic detection, Charge and discharge protection□Intelligent Management
PV Charge		Total Current of PV Input Should Be Less Than Rated Current of PWM solar controller
Display	Display Mode	LCD+LED
	Display Information	Input voltage□output voltage□output frequency□battery capacity□Load condition□Status Information
Output Wave Type		Pure sine wave output,Total Harmonic Distortion THD≤3
Overload Ability		□120% 1 min□□130% 10s
Power Consumption	Sleep Mode	1~6W
	Normal Mode	1~3A
Conversion Efficiency		80%~90%
Transfer Time		□5ms □AC to DC / DC to AC□
Protection		Overload output□short-circuit□high-voltage input□low-voltage input□overheat
Environment	Temperature	-10℃□50℃
	Humidity	10%□90%
	Altitude	≤4000m

The aboveis our standard parameter. Subject to change without prior notice.

Wehave our own professional inverter and controller R&D team andwe provide technical support and OEM ODM service

Thecontroller information above is our company’s standard parameter.It can bechanged to other PWM solar charge controller.

ConnectionDiagram

I-P-SPC-Series System

I-P-SPC-Series Inverter+Solar Controller