Features

1) Easy to install. To configure a solar system, customers only need to connect it with solar panels and batteries.
2)CPU management and control,modular design
3)LCD display,can visually display various parameters(such as the output voltage, frequency, working mode, etc).
4)Multifunction design,customers don’t need to buy solar, controller, charger and stabilizer,etc.
5) External battery connection, convenient to expand back-up power time; user can connect as many batteries as needed according to the local sunlight and wind.
6)With super load-carrying ability and high load capacity, this series of inverters can not only drive resistance load; but also various kinds of inductive loads, such as motor, air conditioner, electric drills, fluorescent lamp, gas lamp, etc. It can drive almost any kinds of load.
7)Low frequency pure sine wave circuit design, good system stability, easy for maintenance, low failure rate and long service life (under proper operation, it may be as long as 5 years).
8) Perfect protection: low voltage protection, over voltage protection, overheat protection, short-circuit protection, overloads protection.
9) CE / EMC / LVD/ RoHS /CCC approvals.
10) 2 years warranty, life-long technical supports.

Function

1. Sole inversion function under inversion mode only connected to battery, can be set to normal working mode and sleep

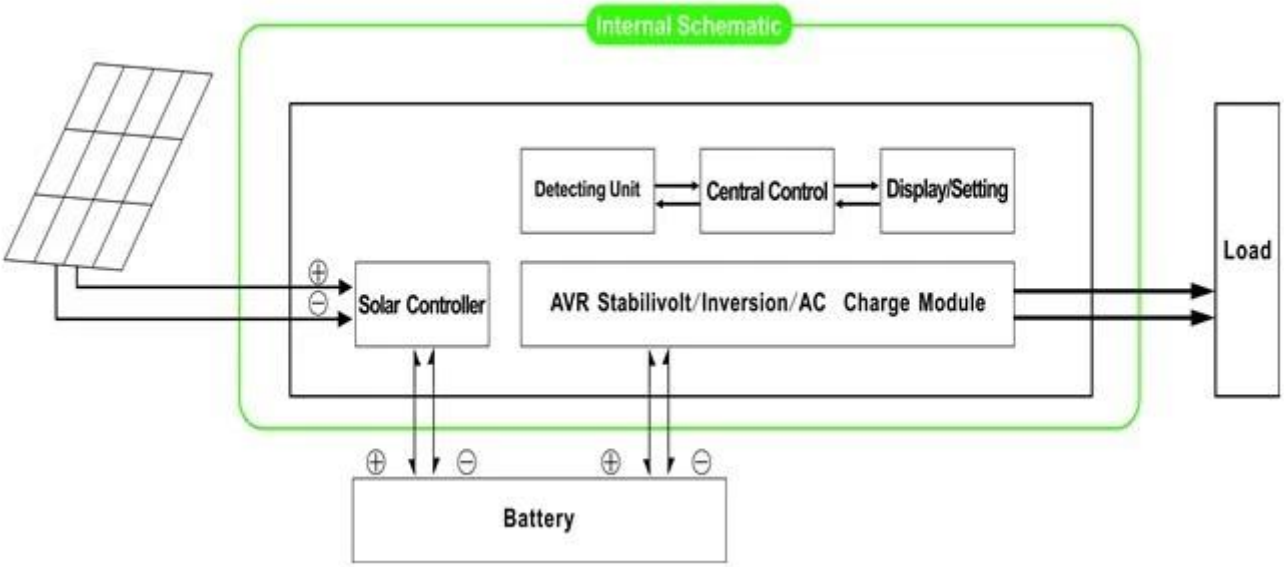

1.1 Normal working mode FREQUENCY in the LCD display is set as 01. No matter whether there are AC loads connected to the inverter or not, the inverter’s output terminal will always have voltage ready to supply power to the loads. Under this mode, the LCD will be displayed as bellow:

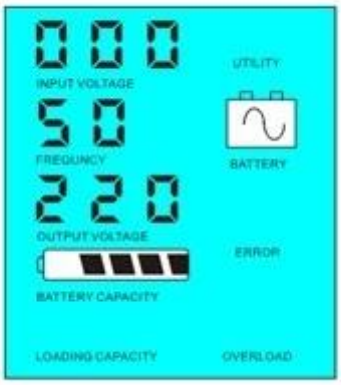

1.2 Sleep mode：FREQUENCY in the LCD display is set as 02. If the power of the loads that connected to the inverter is lower than 5% of the inverter's rated power, there will be no output from the inverter. That is to say, only the chip of inverter is working under such condition and the power consumption is only 1-6W; If the power of the loads that connected to the inverter is higher than 5% of the inverter's rated power, then the inverter will automatically start the inversion function and supply power to the loads within 5s. As shown below:

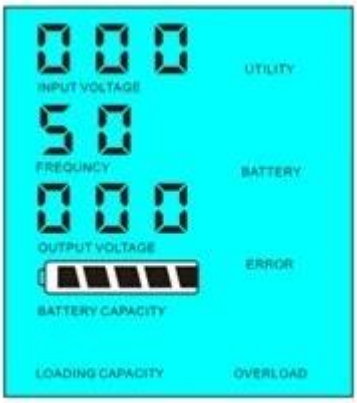

Load's power< 5% of inverter's rated power

Load's power> 5% of inverter's rated power

System introduction under this mode:

1) Only the solar panel charges the battery
2) Independent sole off-grid solar power system; suitable for areas that are lack of utility or have rich solar energy
2. UPS function under utility mode：connected to battery and utility .Can be set as utility first, battery standby mode and battery first, utility standby mode.

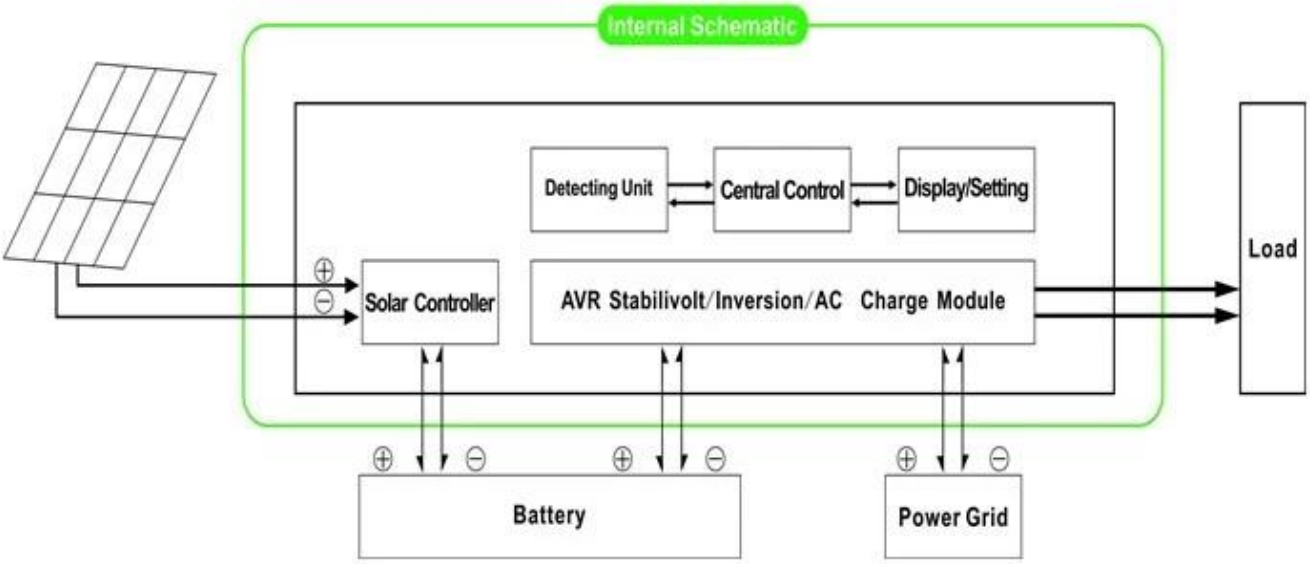

2.1. Utility first, battery standby UPS mode: FREQUENCY in the LCD display is set as 01. When both utility and battery are connected to the inverter, utility will supply power to the loads prior to the battery. When utility is cut off, the battery will automatically continue to supply power after inversion.

Steps are as follows:
Step 1: When utility power is available, it will output directly after voltage being stabilized and charge batteries at the same time.
Step 2: When utility power is cut off suddenly, the inverter will convert DC power to AC power automatically to ensure uninterrupted power supply within 5ms.
Step 3: When utility power becomes available again, it will automatically transfer to utility supplying power to loads and charge batteries at the same time.

See Workflow as below.

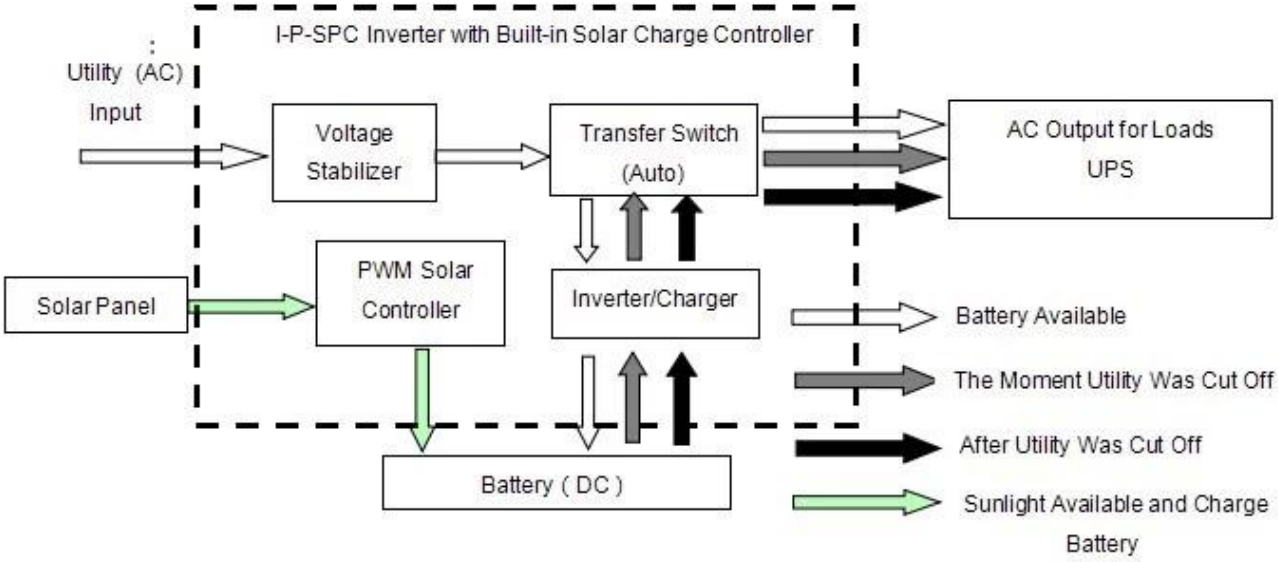

LCD displayed as bellow:

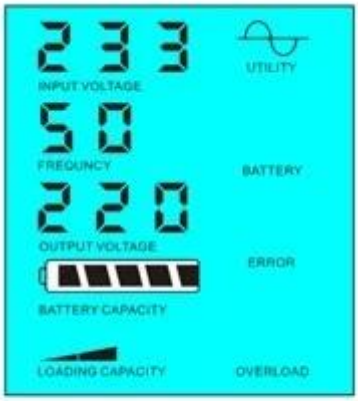

Utility supply power and charge battery

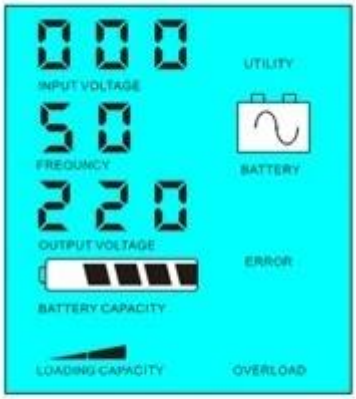

Without utility and battery supply power

System introduction under this mode:
1) There are 2 ways to charge the battery, utility and solar panel
2) This system is suitable for power systems built in areas lacking utility or power systems that frequently used in areas with/without utility
2.2. Battery first, utility standby UPS mode: FREQUENCY in the LCD display is set as 03. When both utility and battery are connected to the inverter,

battery will supply power to the loads prior to utility. When battery capacity is not enough, utility will continue to supply power automatically.
Steps are as follows:
Step 1: When battery has enough power, it will supply power to the loads directly
Step 2: When battery does not have enough power, it will automatically transfer to utility supplying power to the loads
Step 3: After the battery is fully charged (e.g. by solar or wind charge controller), it will then automatically transfer to battery supplying power to the loads.

See Workflow as below.

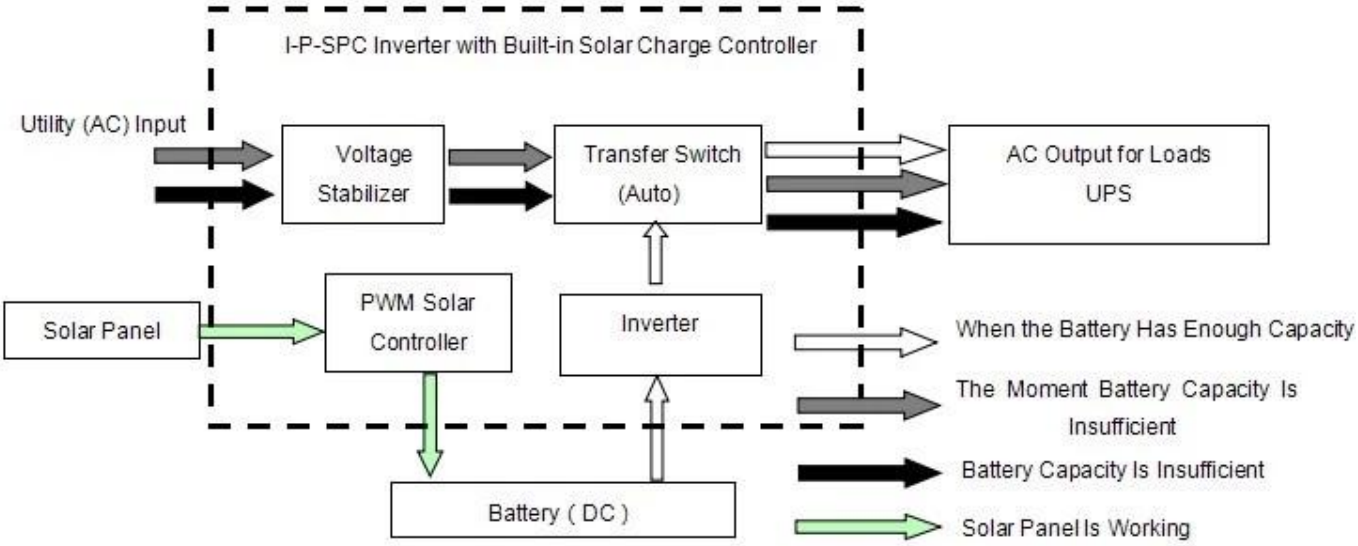

LCD displayed as bellow:

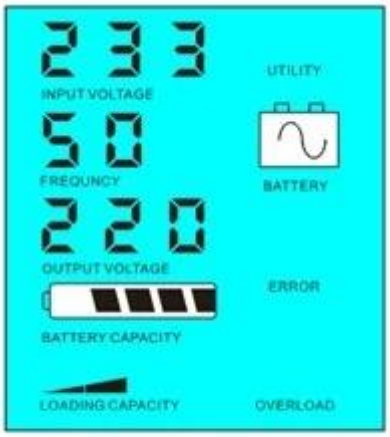

Battery has power and supply power

Battery dead, utility supply power

System introduction under this mode:
1) There is only way to charge the battery: solar panel
2) This system is suitable for areas where electricity is expensive and e
nvironmental areas where solar power can be fully used to save utiliypower, such as family solar&wind system and streetlight solar&wind system

Parameters

Mode		7000VA
Rated Output Capacity		5000W
Peak Power		10000W
Battery Voltage(DC)		48V
PWM Solar Controller	Voltage	48V
	Current	60A
	PV Max Input Voltage	100V
Size W×D×H(mm)		420*260*605
Packing Size W×D×H(mm)		440*280*625
Net Weight (kg)		50
Gross Weight (kg)		60
General Parameter		
Working Mode (Setting)	1	Utility First, Battery Standby
	2	Sleep Mode,no utility,load’s power higher than 5% of rated power, start to work automatically
	3	Battery first, utility standby
AC Input	Voltage	220V±35% or 110V+35%（Optional）
	Frequency	50Hz±3% or 60Hz±3% （Optional）
AC Output	Voltage	220V±3% or 230V±3 or240V±3% or 100V±3% or 110V±3% (Optional)
	Frequency	50Hz±0.5 or 60Hz±0.5 (Optional)
Utility charge	AC Charge Current	0~15A
	Charge Time	Depend on battery capacity and quantity
	Battery Protection	Automatic detection, Charge and discharge protection,Intelligent Management
PV Charge		Total Current of PV Input Should Be Less Than Rated Current
Display	Display Mode	LCD+LED
	Display Information	Input voltage,output voltage,output frequency,battery capacity,Load condition,Status Information
Output Wave Type		Pure sine wave output,waveform distortion rate≤3

Overload Ability		□120% 1 min,□130% 10s
Power Consumption	Sleep Mode	1~6W
	Normal Mode	1~3A
Conversion Efficiency		80%~90%
Transfer Time		□5ms □AC to DC / DC to AC□
Protection		Overload output,short-circuit,high-voltage input,low-voltage input,overheat
Environment	Temperature	-10℃□50℃
	Humidity	10%□90%
	Altitude	≤4000m

The above parameters with “or” means that the parameter needs to do factory settings as per customer’s preference.
The controller information above is our company’s standard parameter and can be changed according to customer’s requirement.
We have our own professional inverter controller and UPS R&D team and we provide technical support and OEM service.

Connection Diagram

Others

Please refer to the outline design, technical documents, product brochures, etc.
Made by Engineering Department, May 5, 2014, 1st Edition.