□□

1□□□

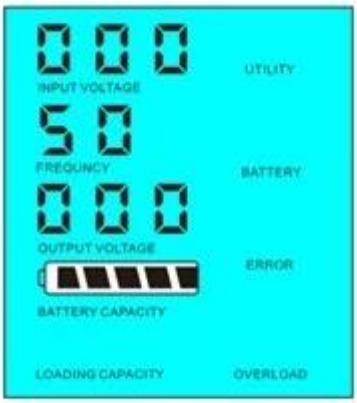

Load's power< 5% of inverter's rated power

Load's power> 5% of inverter's rated power

□□□□□□□□□□□□□□□□□□
1□□□□□□□□□□□□□□□□□□□□□□□□□□□□□□
2□□□□□□□□□□□□□□□□□□□□□□□□□□□□□□; □NBSP□□□□□□□□□□;□NBSP□□□NBSP□□□NBSP□□□NBSP□□□□□□□□□□□□□□□□□□□

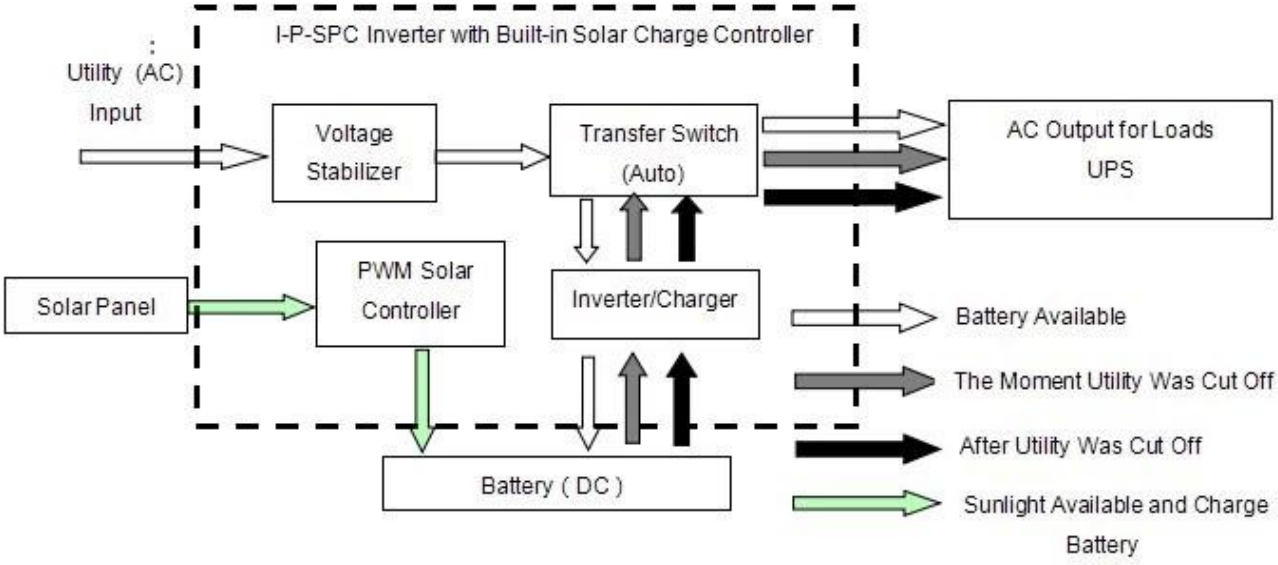

□□□□□□□□□□□□□□□□□□□□□□□□

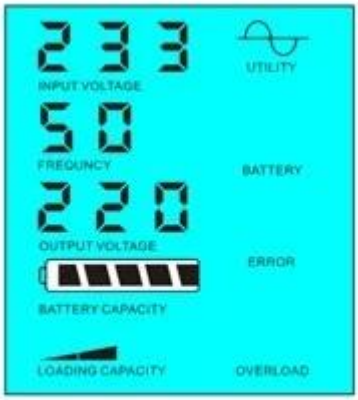

Utility supply power and charge battery

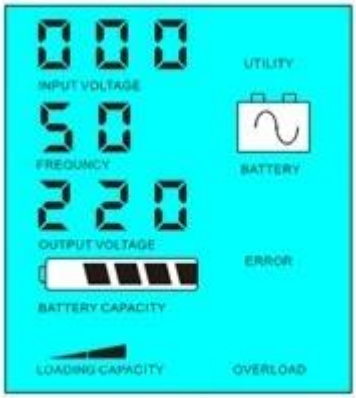

Without utility and battery supply power

□□□□□□□□□□□□□□□□□□
1□□□□□□□□□□□□□□□□□□□□□□□□□□
2□□□□□□□□□□□□□□□□□□□□□□□□□□;□□□□□□□□□□□□□□□□□□□

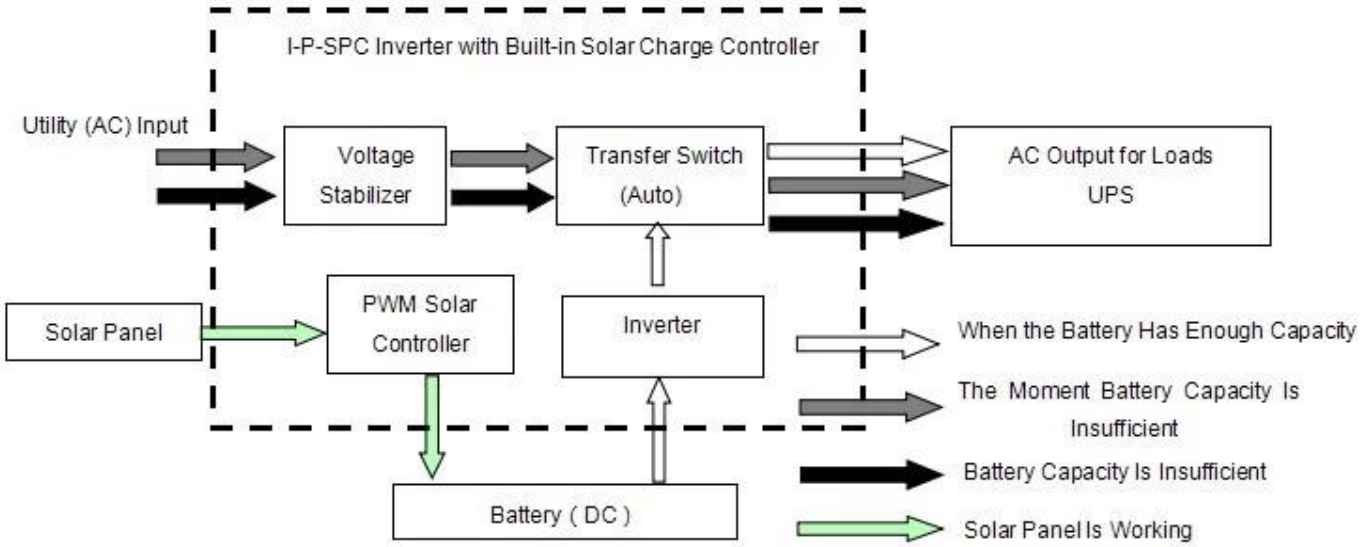

□□□□□□□□□□□□□□□□□□□□□□□□

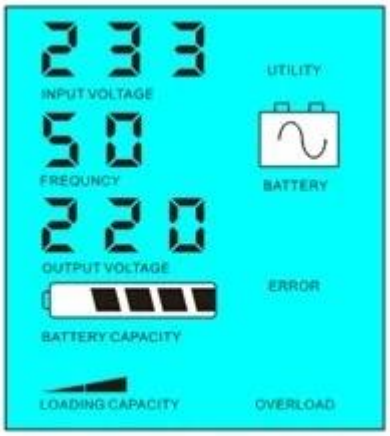

Battery has power and supply power

Battery dead, utility supply power

□□□□□□□□□□□□□□□□□
□□□□□□□□□□1□□□□□□□□□□□□□□□□□□□□□□□□□□□□□□
□□□□□□□□□□□□□038;□□2□□□□□□□□□□□□□□□□□□□□□□□□□□□□□□□utiliypower□□□□□□□□□□□□□□□□□□□

□□□□□□□□□□	1	□□□□□□□□□□□□□□□□□□□□□□□□
	2	□□□□□□□□□□□□□□□□□□□□□□□□□□□□□□□□ □□□□□□5□□□□□□□□□□□□□□□
	3	□□□□□□□□□□□□□□□□□□□□□□□□
AC□□	□□	220V□□□□□□□□35□□□□110V + 35□±
	□□□	3□□□□60Hz±3□±50Hz□□□□□□□□□
AC□□	□□	220V±3□□□□230V±3 or240V±3□□□□100V±3□ 110V±3□ □□□□□□□□
	□□□	0.5±0.5□□□60Hz±50Hz□□□□□□□□□
□□□□□□□□□□□□□	AC□□□□	0□15A
	□□□□	□□□□□□□□□□□□□□□
	□□□□□□□	□□□□□□□□□□ □□□□□□□□□□□□□□□□□
PV□□□□		PV□□□□□□□□□□□□□□□□□□□□□□□□□□ □□□□□
□□□□□□□	□□□□□□	□□□+□□LED
	□□□□□□	□□□□□□□□□□□□□□□□□□□□

I-P-SPC-Series System
Solar Panel
DC Output
AC Output
Battery Box
AC Input（not essential）
I-P-SPC-Series Inverter+Solar Controller

□□□
□□□