□□

1□□□

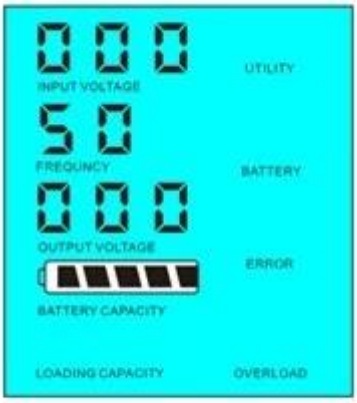

Load's power< 5% of inverter's rated power

Load's power> 5% of inverter's rated power

□□□

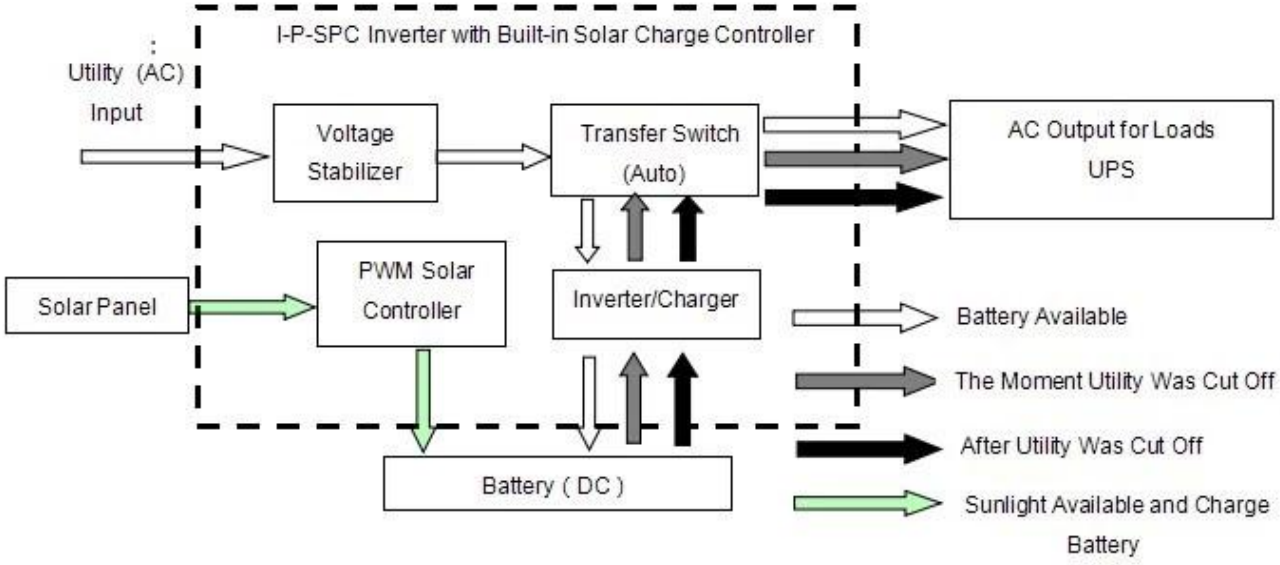

□□□□□□□□□□□□□□□□□□□□□□□□

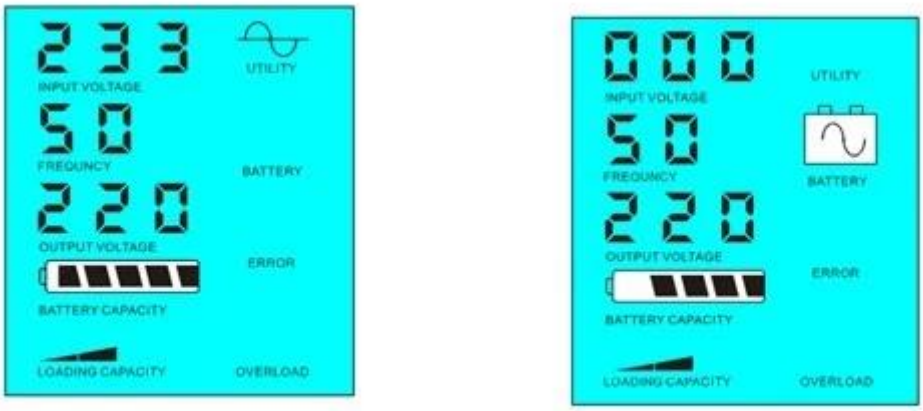

Utility supply power and charge battery　　Without utility and battery supply power

□□□□□□□□□□□□□□□□□
1□□□□□□□□□□□□□□□□□□□□□□□□□□
2□□□□□□□□□□□□□□□□□□□□□□□□□□;□□□□□□□□□□□□□□□□□□□

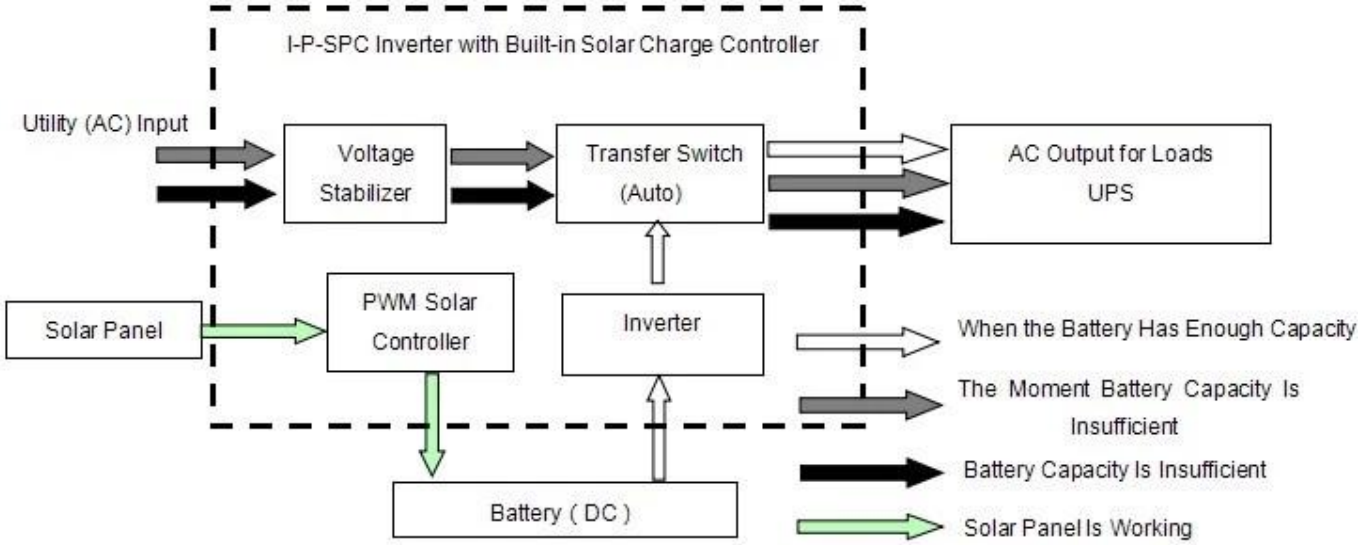

□□□□□□□□□□□□□□□□□□□□□□□□

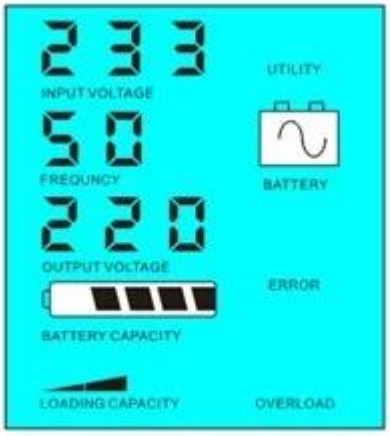

Battery has power and supply power

Battery dead, utility supply power

□□□□□□□□□□□□□□□□
□□□□□□□□□□1□□□□□□□□□□□□□□□□□□□□□□□□□□□□□□
□□□□□□□□□□□□□038;□□2□□□□□□□□□□□□□□□□□□□□□□□□□□□□□□□utiliypower□□□□□□□□□□□□□□□□□□□

□□□□□ □□□□□□□	1	□□□□□□□ □□□□□□□□□□□□□□
	2	□□□□ □□□□□□□□□□□□□□□□□□□□□□□□□□□5□□□□□□□□□□□□ □□□□
	3	□□□□□ □□□□□□□□□□□□□□□□
AC □□□□□	□□	35□±220V □□□110V + 35□□□□□□□□
	□□□	3□±50Hz□ □□□60Hz±3□□□□□□□□
AC □□	□□	3□±220V □□□230V±3 or240V±3□□□□100V±3□□□□110V±3□□□□□□□□
	□□□	0.5±50Hz□ □□□60Hz±0.5□□□□□□□
□□□□□□□ □□	AC □□□□	0□15A
	□□ □□	□□□□□ □□□□□□□
	□□□□□ □□	□□ □□□□□□□□□□□□□□□□□□□□□□□
PV □□		□□ PV□□□□□□□□□□□□□□□□□□□□□□□□□□
□□□□□□	□□□□□□ □□□	□□+□□LED
	□□□□□□ □□	□□□□□ □□□□□□□□□□□□□□□□□□□□

I-P-SPC-Series System
Solar Panel
DC Output
AC Output
Battery Box
AC Input（not essential）
I-P-HPC-Series Inverter+Solar Controller

□□□
□□□