[illegible]

1. [illegible]

2. CPU[illegible]

3. LCD[illegible]LED[illegible]

4. [illegible]mode.the[illegible]AC[illegible]DC[illegible]50Hz[illegible]60Hz[illegible]

5. [illegible]87[illegible]98[illegible]1W[illegible]6W[illegible]

6. [illegible]8[illegible]

7. [illegible]

8. [illegible]3[illegible]1KW[illegible]1HP[illegible]2HP[illegible]3HP[illegible]3KW[illegible]2KW[illegible]

9. [illegible]5[illegible]

10. [illegible]

11. [illegible]EMC[illegible]LVD[illegible]RoHS[illegible]

12. 2[illegible]

[illegible]

1.[illegible]UPS[illegible]EPS[illegible]

[illegible]2[illegible]

3. [illegible]

3.1[illegible]

3.2[illegible] AC[illegible]

3.3[illegible] DC[illegible]

[illegible]

[illegible]

1. [illegible]

[illegible]ON[illegible]S-ON[illegible]

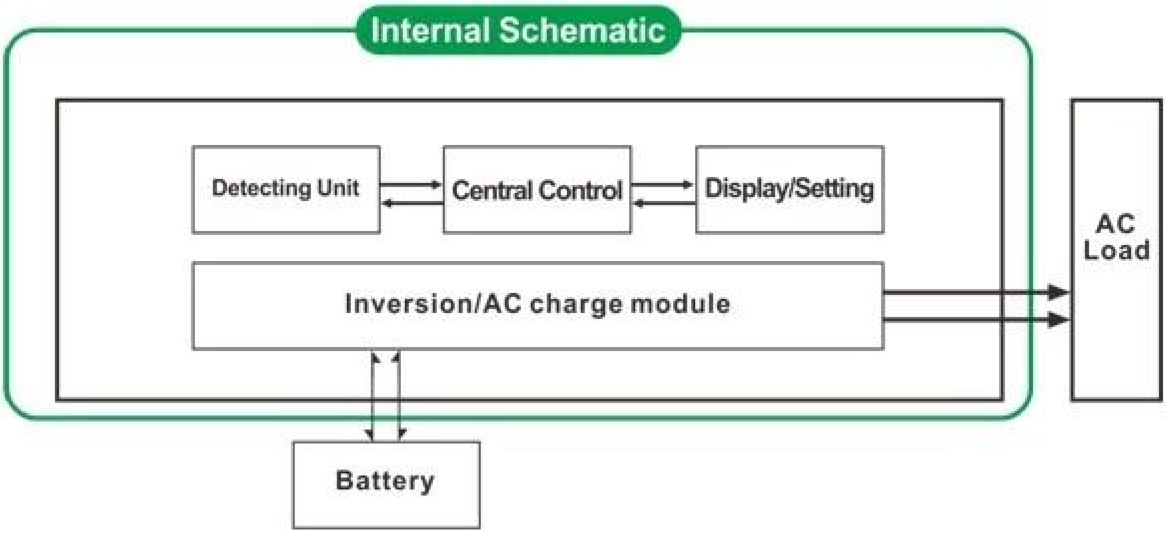

1.1[illegible]ON[illegible]AC[illegible]

[illegible]LCD[illegible]

1.2[illegible]S-ON[illegible]IF[illegible] [illegible]30W[illegible]1-6W[illegible]30W[illegible]5[illegible]LCD[illegible]

2. [illegible]

[illegible]8[illegible]

[illegible]

[illegible]CC[illegible]CV[illegible]CF[illegible]

PS[illegible]0[illegible]0[illegible]

3. UPS[illegible]

[illegible]1[illegible]

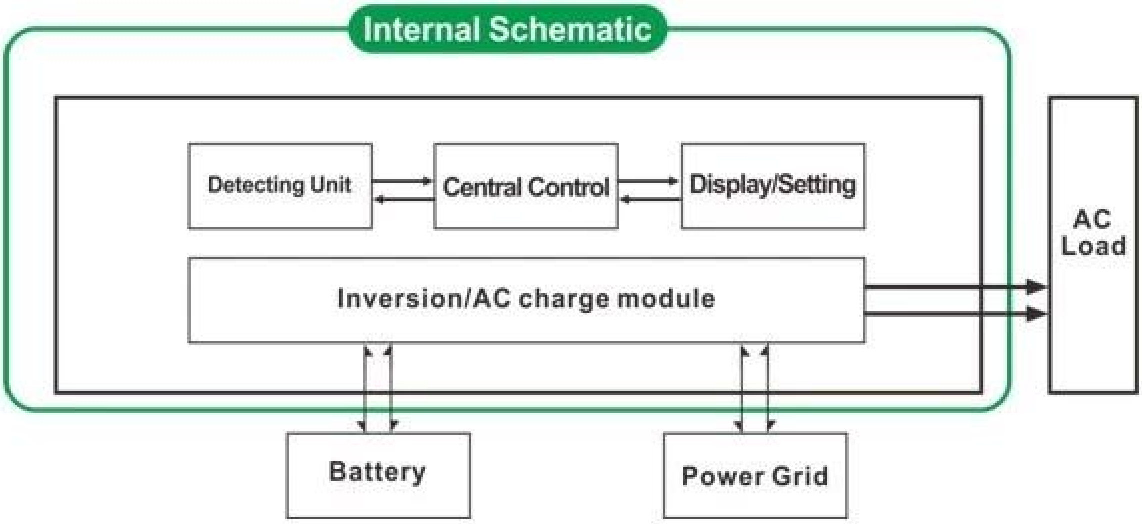

3.1. [illegible]UPS[illegible]AC[illegible]

[illegible]

[illegible]

[illegible]1[illegible]

[illegible]2[illegible]5ms[illegible]AC[illegible]DC[illegible]

[illegible]3[illegible]

[illegible]

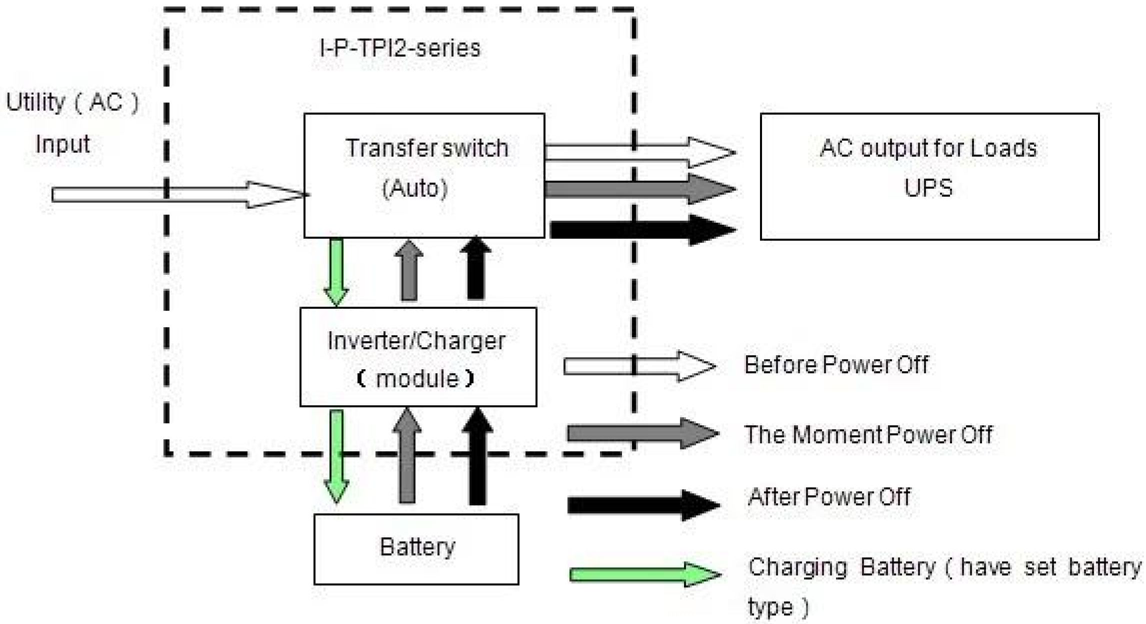

3.2. [illegible]UPS[illegible]DC[illegible]

[illegible]0[illegible]

□□□□□□□□□□□□□□□□□□□□□□□□□□□□□□□□□□□□ □□□□□□□□□□□□□□□□□□□□□□□□□□□□□

□□□□□□□□□□□□□□□□□□□□□□□□□

□□□□□□□□□□

□□□□1□□□□□□□□□□□□□□□□□□□□□□□□□□□□□

□□□□2□□□

□□□□3□□

□□□□□□□□□□□□□□□□□□□

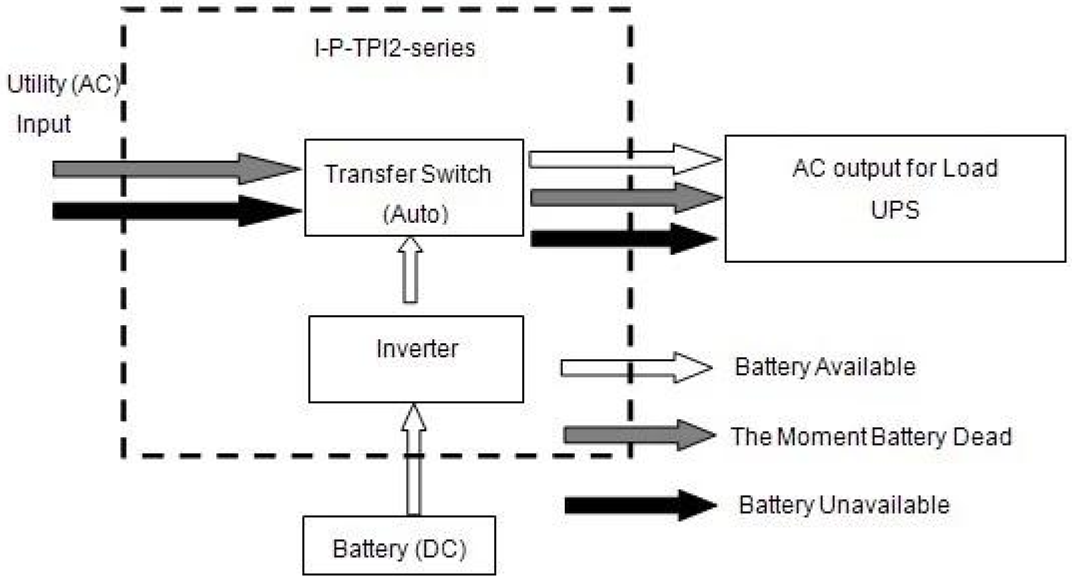

□□□□□□

□□□ □□□□□□		1000W	2000W	3000W	4000W	5000W	6000W
□□□ □□□□		1000W	2000W	3000W	4000W	5000W	6000W
□□□□□		3000W	6000W	9000W	12000W	15000W	18000W
□□□□□ □□□DC□		12V□□□24V□□□48V□□□□□□□			24V□□□48V□□□□□□□		
□□□ W×D×H□mm□□		318 * 218 * 368			440 * 218 * 400		
□□□□□ □□□W×D×H□mm□□		395 * 275 * 520			520 * 275 * 520		
□□□□ □KG□		27	28	30	39	40	51
□□□ □□□kg□		29	30	32	43	48	53
□□ □□□ □□□□	□□	□□□□□□□□					
	S-ON	□□□□□□□□□□□□□□□□□□□□□□□□□□□ 30 W□□□□□□□□□□□□□					
	□□	□□□□□					
AC□□	□□	220V□□□□□□□35□110V 35□□□□□□±					
	□□□	□□□50Hz□□□60Hz□□□					
AC□□	□□	220V±3□□□□230V±3□□□240V±3□□□□100V±3□ □□□110V□□□□□□□±3□					
	□□□	□□□□□□□□□□□□□□□□□□□□□□□□□□□ 50Hz□□□60Hz□□□□□□□□□□□□□□·□□□□					

[illegible] [illegible] [illegible] [illegible]0[illegible] [illegible]	[illegible] [illegible] [illegible]MAX[illegible]	BAT	1000W	2000W	3000W	4000W	5000W	6000W
		12V	35A	65A	75A	/	/	/
		24V	20A	35A	45A	65A	70A	75A
		48V	10A	15A	30A	35A	40A	50A
	[illegible] [illegible]		[illegible] [illegible]1[illegible]2[illegible] [illegible] [illegible]DE-[illegible] OEM[illegible]					
	[illegible] [illegible]		[illegible]CC[illegible]CV[illegible]CF[illegible]					
	[illegible] [illegible]		[illegible]					
	[illegible] [illegible]		[illegible] [illegible]					
UPS [illegible]	[illegible]		[illegible]					
	DC		[illegible] [illegible]					
[illegible]	[illegible] [illegible]		LCD + LED					
	[illegible] [illegible]		[illegible] [illegible]					
[illegible] [illegible]			[illegible]					
[illegible] [illegible]			> 120[illegible]1[illegible]> 130[illegible]10S					
[illegible] [illegible]	[illegible]		1[illegible]6W					
	[illegible] [illegible]		1[illegible]3A					
[illegible] [illegible]			80[illegible]90[illegible]					
[illegible] [illegible]			<5ms[illegible]AC[illegible]DC / DC[illegible]AC[illegible]					
[illegible]			[illegible] [illegible]					
[illegible]	[illegible]		-10℃[illegible]50℃					
	[illegible]		10[illegible]90[illegible]					
	[illegible]		≤4000[illegible]					

□□□□□□□□□□□□□□ □□□□□□□□□□□□□□□□□□□□□□□□□□□□□□□□□□□□

□□□□□□□□□□ □□□□□□□□□□□□□□□□□□□□□□□□□□□□□R□D□□□□□□□□□□□□□□ □□□□□□□□□OEM□□□□□□

□□

□□□□ □□□□□□□□□□□□□□□□□□□□□□□□□□□□□□□□□□□□

□□□□ □□□□□2014□5□13□□□□2□□□□