[illegible]

1[illegible]·[illegible]UPS[illegible]

[illegible]2[illegible]

3[illegible]

3.1[illegible]

3.2 AC[illegible]

3.3 DC[illegible]

[illegible]

1[illegible]

2[illegible]CPU[illegible]

3[illegible]

4[illegible]

5[illegible];[illegible]

6[illegible] [illegible]

[illegible]

7[illegible]it[illegible]5[illegible]

8[illegible]

9[illegible]CE / EMC / LVD / RoHS[illegible]

10 2[illegible]

[illegible]

1[illegible] [illegible] [illegible]

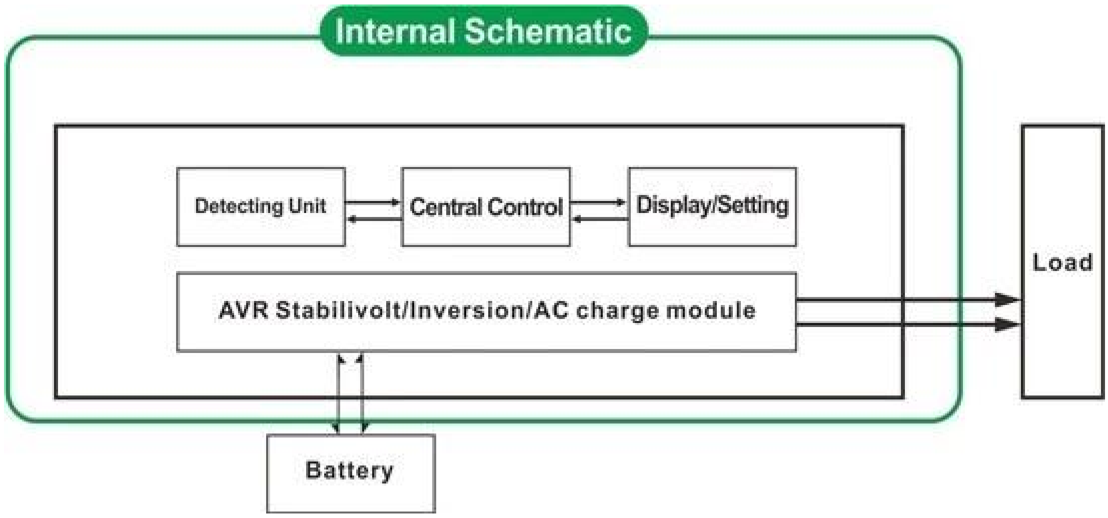

1.1□□□□□□□□□□□□□□□□□□□□□FREQUNCY□□□□□□□□01□□□□□□□□□□□□□□□□□□□□□□AC□□LCD□□□□□□□□□□□□□□□□

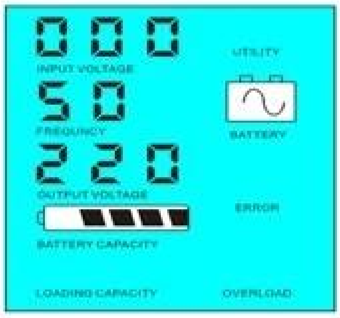

1.2□□□□□□□□□□□□□□□□□□□□FREQUNCY□□□□□□□□□02□□5□□□1-6W□□□□ IF□□□5□□□□□□□□□□□□□□□□□□□□□□□□□□□□□□□□□□□5S□□□□□□□□□□□□□

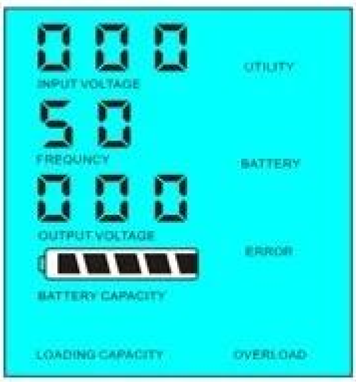

Load's power＜5% of inverter's rated power

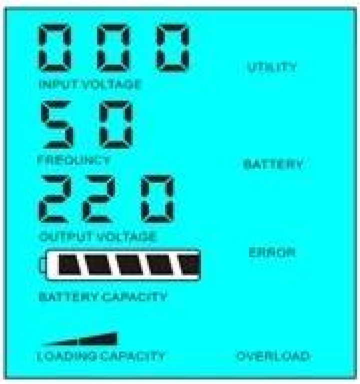

Load's power＞5% of inverter's rated power

2□ □□□UPS□□□□

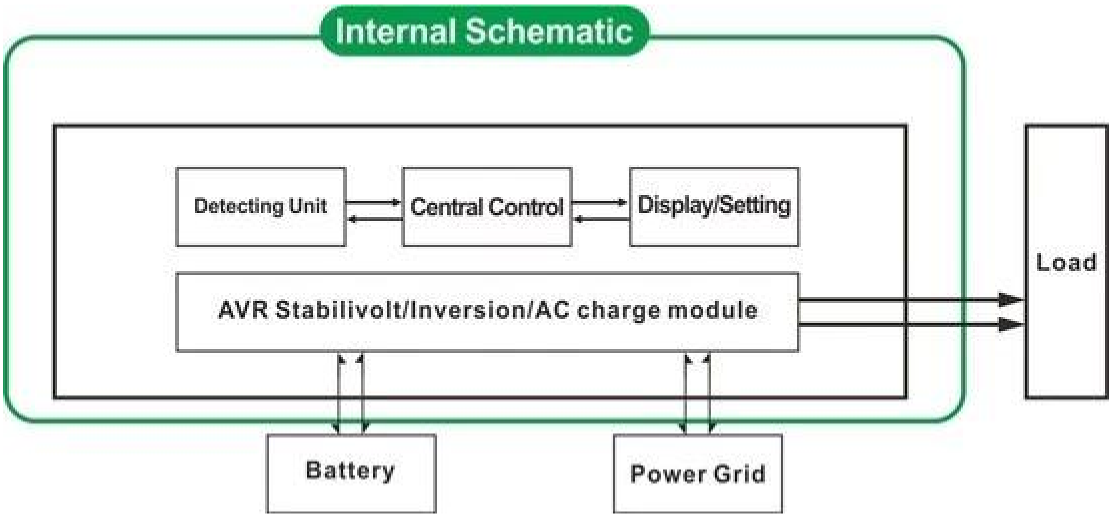

2.1□□□□□□□□□□□□□□□□□□□□□□UPS□□□□LCD□□□□□□□□□□□□FREQUENCY□01□□□

□□□□□□□□□□□□

□□□□1□□□□□□□□□□□□□□□□□□□□□□□□□□□□□□□□□voltagebeing□□□□□□□□□□□□□□□□□□

□□□□2□□5ms□□□□□□□□□□□□□□□□□□□□□□

□□□□3□□□

□□□□□□□□□□□□□□□□□□□□□□□□

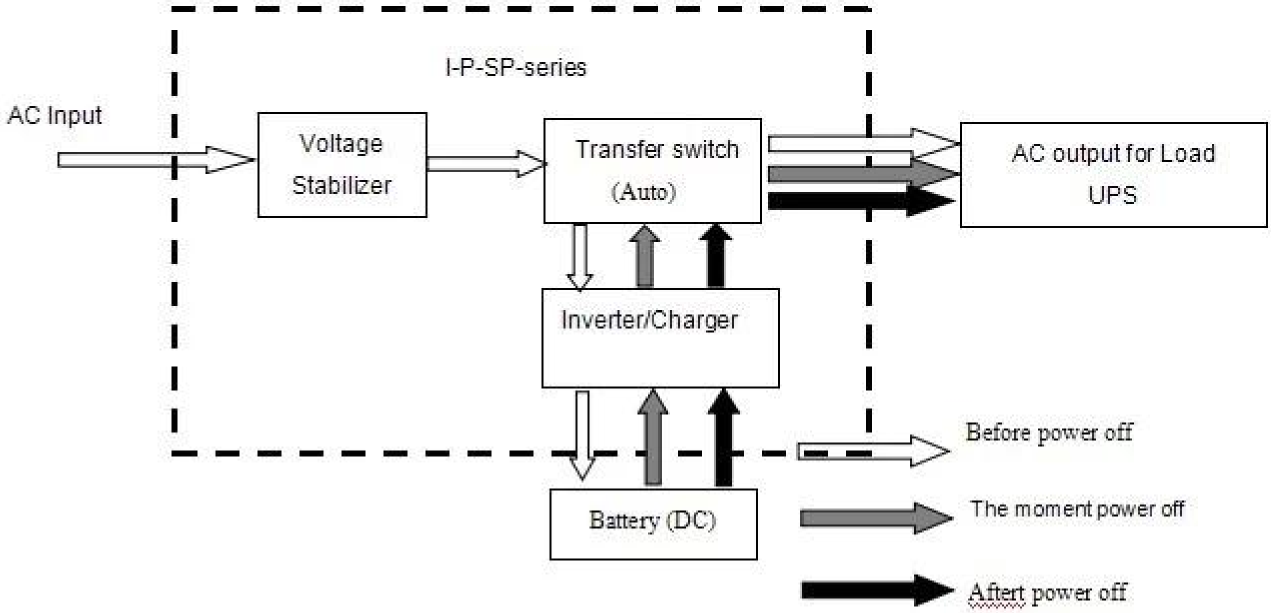

LCD□□□□□□□□□□□□□□

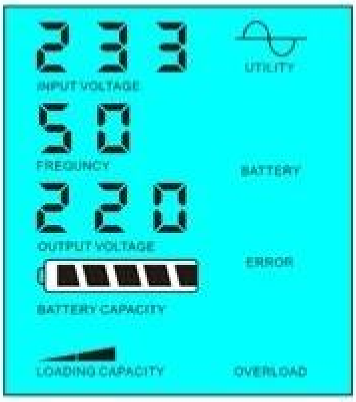

Utility supply power and charge battery

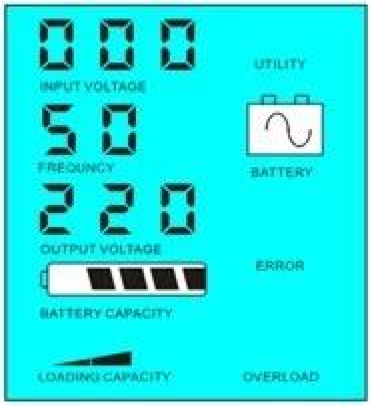

Without utility and battery supply power

2.2□1□□□□□□□□□□□□□□□□□□UPS□□□□□□□□□□□□□□□□□03□□□

□□□□□□□□□□□

□□□□1□□□□□□□□□□□□□□□□□□□□□□□□□□□□□□□□

□□□□2□□□

□□□□3□□

□□□□□□□□□□□□□□□□□□□□□□

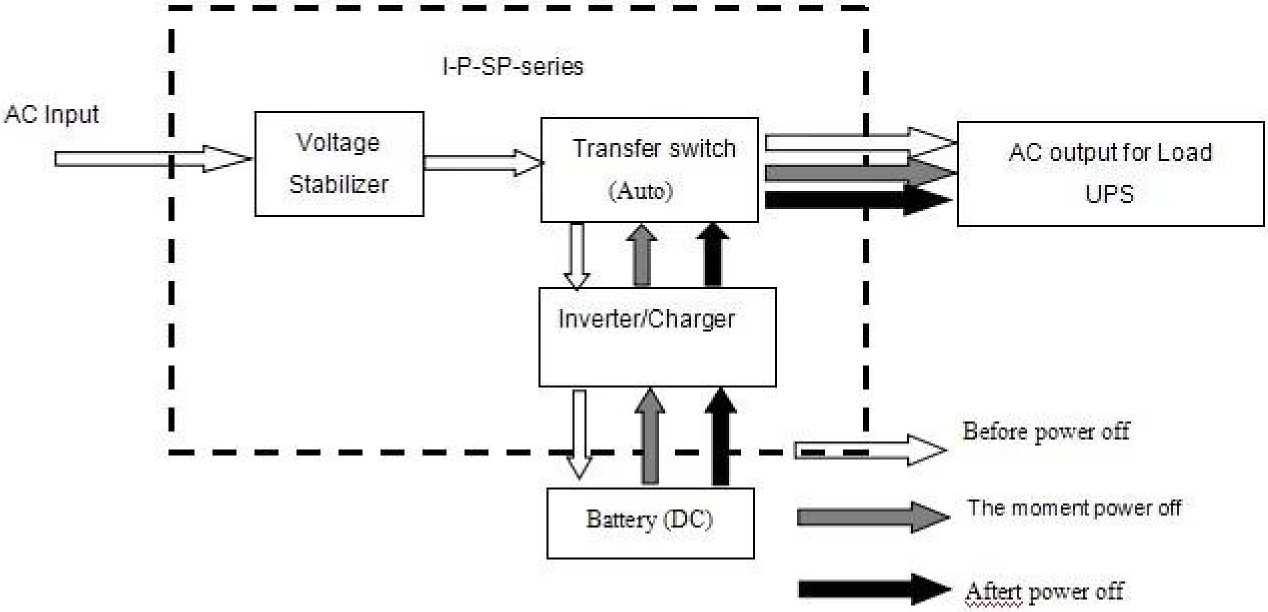

LCD□□□□□□□□□□□□□

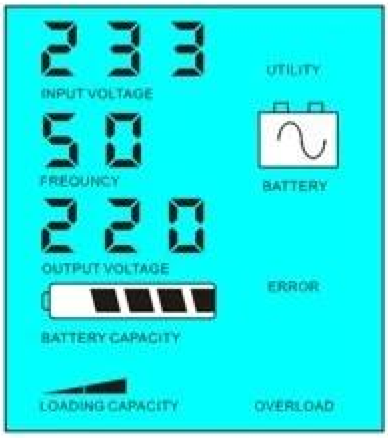

Battery has power

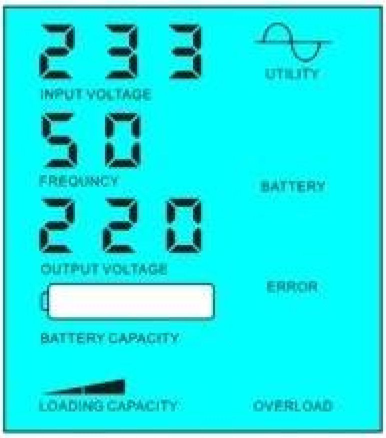

Battery dead, utility supply power

□□□□□□

□ □□ □□□□□		20KVA
□□□□ □□		15000W
□□□□□		30000W
□□□□□□□□DC□		192V
□□□W×D×H□mm□□		420 * 280 * 625
□□□□□W×D×H□mm□□		440 * 300 * 645
□□□□ □KG□		105
□□□ □KG□		115
□□ □□□□□□		
□□ □□□	1	□□□□□□□□□□ □□□□□□ □□□□□□
□□□□	2	□□□□□□□□□□□□□□□□□□□5□□□□□□□ □□□□□□ □□□□□□□□□□
	3	□□□□□□□□□□ □□□□□□□□□□□□□□
AC□□	□□	220V□□□□□□□35□110V 35□□□□□□±
	□□□	50Hz□±3□□□□60Hz±3□□□□□□□□
AC□□	□□	220V±3□□□□230V±3□□□240V±3□□□□100V±3□
		□□□110V□□□□□□□□±3□
	□□□	0.5□□□60Hz±0.5□□□□□□□□±50Hz□
□□	AC□□ □□□	0□15A
	□□ □□	□□□□□□□□□□□□□
	□□□□□ □□	□□□□□□ □□□ □□□□□□□□□□□□□ □□
□□□□□□	□□□□□	□□□□□□□□□
	□□□□	□□□□□□□□□□□□□□□□□□□□□□□□□□□□□□□□□□□□□
□□□□□□□		□□□□□□□□□□□□□ □□□≤3
□□□□□		> 120□1□□> 130□□10S
□□□□	□□□□□□□	1□6W
	□□□□□	1□3A
□□□□		80□□□□□□90□□□□□
□□□□		<5ms□□AC□DC / DC□□AC□□
□□		□□□□□□□□□□□□□□□□□□□□□□□□□□□□□□□□□□
□□	□□	-10℃□50℃
	□□	10□□□□□□90□□□□□
	□□	≤4000□□□□

[illegible]

[illegible]

[illegible]

[illegible]R[illegible]D[illegible]OEM[illegible]

[illegible]

[illegible]

[illegible]2014[illegible]5[illegible]5[illegible] [illegible]2[illegible]