12V 24V 48V 5KW TPI2□□□□□□□□□□□□□UPS□□

□□□□□

DC−
DC+
DC INPUT
12V 24V 48V
Remote Port
AC OUTPUT
MAX 5A
AC INPUT AC OUTPUT
L N E L N E
Inverter
Output Protect
Charger
Input Protect

□□□□

1. 3□□□□□□□□□□□□□□□□□□
2.□□□□□□□50Hz□□□□□□□□□□□□□□□□□60 HZ
3.□□□□□□□DC□□/ AC□□□□□□□□□□□□□□□□
□□□□□□□□□1□6□□□□□4.□□□consumtion
□□□□□5.□□□□□□□□□□□CC□CV□CF

□□□□□□□□□□□□□□□□□□ □□□□□□□□□□□

□□

1.DC / AC□□□□

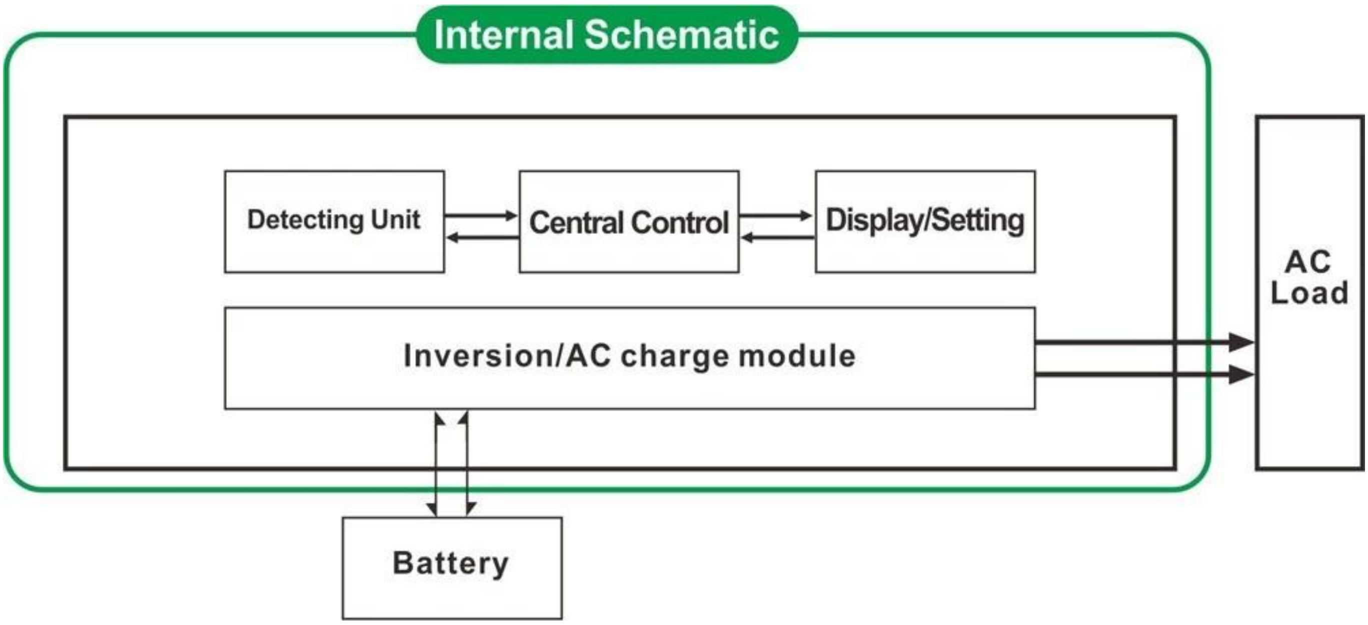

2.[illegible]

1[illegible]8[illegible]

2[illegible]

3[illegible]3[illegible]CC[illegible]CV[illegible]CF[illegible]

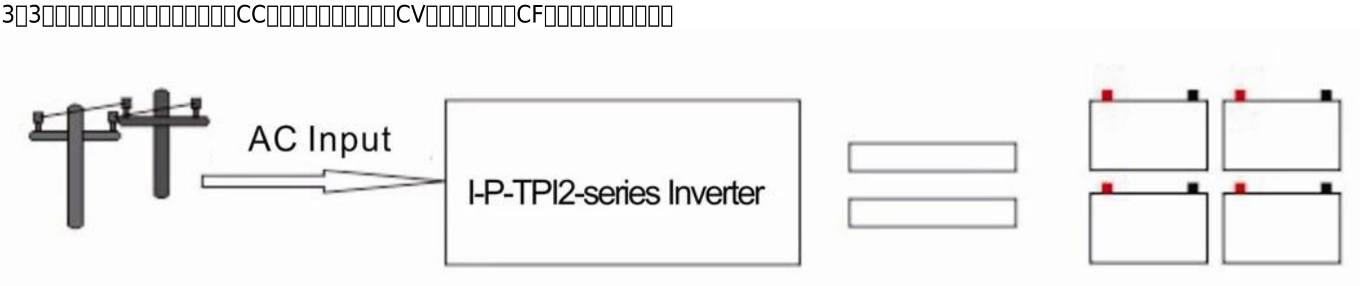

3. UPS[illegible]

[illegible]AC[illegible]1[illegible]DC[illegible]

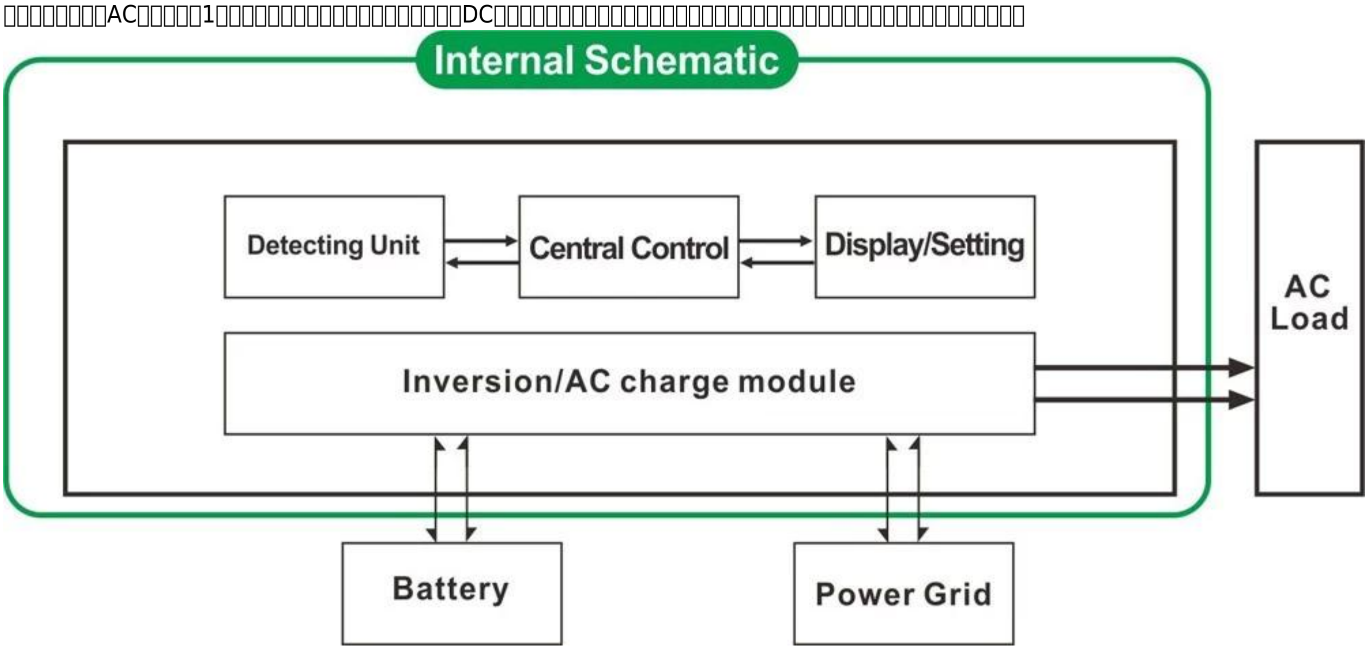

3.1[illegible]UPS[illegible] "AC"[illegible]

3.2[illegible]UPS[illegible]DC[illegible]

[illegible]

1.[illegible]

2. CPU[illegible]

3. LCD[illegible]LED[illegible]

4.[illegible] [illegible]1[illegible]DC[illegible]50Hz[illegible]60Hz[illegible]

5.[illegible]87[illegible]-98[illegible]1W[illegible]6W [illegible]

6.[illegible]8[illegible] [illegible] [illegible] [illegible]

7.[illegible]

8[illegible] [illegible] [illegible] [illegible]3[illegible]1KW [illegible]1HP[illegible]2KW[illegible]2HP[illegible] 3KW[illegible]3HP[illegible]

9.[illegible] [illegible]5[illegible] [illegible]

10.[illegible] [illegible]

11. EMC[illegible]LVD[illegible]RoHS[illegible] [illegible]

12[illegible] 2[illegible]

[illegible]

[illegible] [illegible]				1000W	2000W	3000W	4000W	5000W	6000W
[illegible]				1000W	2000W	3000W	4000W	5000W	6000W
[illegible]				3000W	6000W	9000W	12000W	15000W	18000W
[illegible]DC[illegible]				12V[illegible]24V[illegible]48V[illegible]			24V[illegible]48V[illegible]		
[illegible]W×D×H[illegible]mm[illegible]				318 * 218 * 368			440 * 218 * 400		
[illegible]W×D×H[illegible]mm[illegible]				395 * 275 * 520			520 * 275 * 520		
[illegible]				27	28	30	39	40	51
[illegible]				29	30	32	43	48	53
[illegible] [illegible]	[illegible]			[illegible]					
	[illegible]			[illegible]Mode.1-6W[illegible]5[illegible] [illegible]					
	[illegible]			[illegible]					
AC[illegible]	[illegible]			220V[illegible]35[illegible]110V + 35[illegible]±[illegible]					
	[illegible]			50Hz[illegible]60Hz					
AC[illegible]	[illegible]			220V±3[illegible]230V±3[illegible]240V±3[illegible] 3[illegible]±100V [illegible]110V[illegible]±3[illegible]					
	[illegible]			[illegible]50Hz[illegible]60Hz[illegible] DC / AC[illegible]					
[illegible] [illegible]0[illegible]AC[illegible] [illegible]	AC[illegible] [illegible]	[illegible]		1000W	2000W	3000W	4000W	5000W	6000W
		12V		35A	65A	75A	/	/	/
		24V		20A	35A	45A	65A	70A	75A
		48V		10A	15A	30A	35A	40A	50A
	[illegible]			[illegible]1[illegible]2[illegible] [illegible] [illegible]OEM[illegible]					
	[illegible]			[illegible] [illegible]CC[illegible]CV[illegible]CF[illegible]					
	[illegible]			[illegible] [illegible]					
	[illegible]			[illegible] [illegible]					
UPS [illegible]	[illegible]			[illegible] [illegible]					
	DC			[illegible]					
[illegible]	[illegible]			[illegible]+[illegible]LED					
	[illegible]			[illegible]					
[illegible]				[illegible]					
[illegible]				> 120[illegible]1[illegible]> 130[illegible]10s[illegible]					
[illegible]		[illegible]		1[illegible]6W					
		[illegible]		1[illegible]3A					
[illegible]				87[illegible]98[illegible]					
[illegible]				DC[illegible]<5ms[illegible]AC / AC[illegible]DC[illegible]					

□□		□□□□□□□□□□□□□□□ □□□□□□□□□□□□□
□□	□□	-10℃□50℃
	□□	10□□90□
	□□	≤4000m

□□□

ISO2008

ISO2004

CE-EMC

CE-LVD

FCC

RoHS□□

□□□□□□□□

1□ OEM□□□ODM□□□ □□□□□□□□□

2.□□□□□□□□□□□□□□□□□□□□□□□□□□□□□□□□□□□

3. 24□□□□□□□□□□□□□□□□□□□□□□□□□□□

4.[illegible]
[illegible]5.[illegible]

[illegible] I-P-Smart2 MPPT[illegible]