□□□□

□□ □□□□□□□□□□□□□□□□□□□□□□□□□□□MPPT□□□□ □□□□□□□□□□□□□□□□□□ □□□□□□□□□□□□□□□□□□□□□□□□□□□□□□□□□□ □□□□□□□ □□□□□□□□□□□□□□□□□□□□□□□□□AC□□□□□□□□DC□□□□□□ □□□□□□□□□□□□□□□□□□□□□□□□□□□□□□□/□□□□□□□ □□□□□ □□□□□□□□□□□□□□□□□□□□□□□□□□□□□□

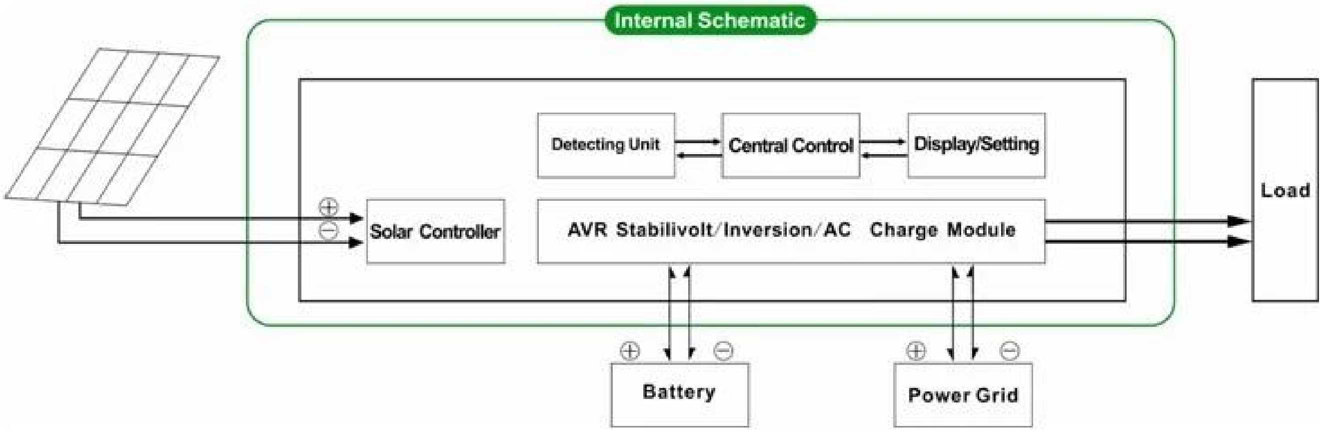

□□□□□□

1. □□□□□□□□ Easy□□□□□□□□□□□□ □□□□□□□□□□□□□□□□□□□□□□□□□□□□□□□

2. CPU□□ □□□□□□

3. Built□□MPPT□□□□□□□□□□□ □□

4. □□□□□□□□□□ □□

5. Intellectual□□□□□□□ □□□□□□□□□□□□□□□□□□□□□□□□□□□□□□□□□□□□

6. □□□□ External□□□□□□□□ □□□□□□□□□□□□□□□

7.Strong□□□□□□□□□□ □□□□□□□□□□□□□□□□□□□□□□□□□□□□□□□□□ 5□□□□□□□

8.Perfect□□□□□□□□□ □□□□□□□□□□□□□□□□□□ □□□□□□□□□

9.CE / EMC / LVD / RoHS□□□□

10.Two□ □□□□□□□□□□□□□□

□□

1.Charging□□

□□ □□□□□□□□2□□□□□□□□□□□□□□

2.[illegible]

[illegible]2[illegible]

[illegible]2.1 AC[illegible]DC[illegible]UPS[illegible]

[illegible]

[illegible]

[illegible]1[illegible]

[illegible]2[illegible]5ms[illegible]

[illegible]3[illegible]

[illegible]

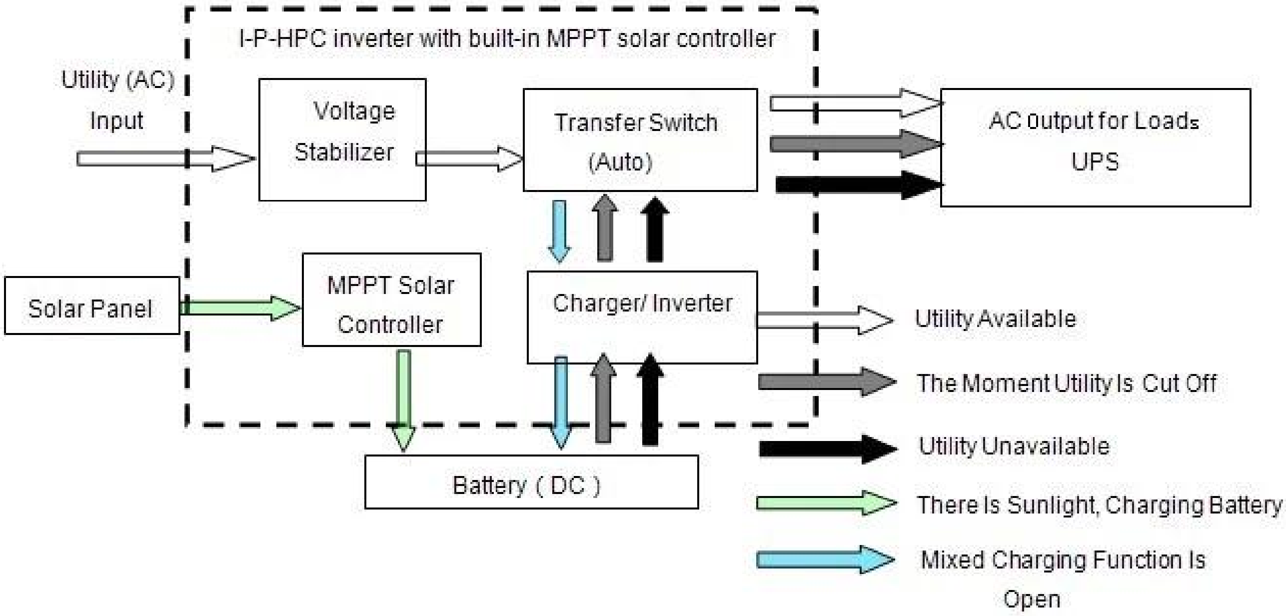
I-P-HPC inverter with built-in MPPT solar controller
Utility (AC) Input
Voltage Stabilizer
Transfer Switch (Auto)
AC output for Loads UPS
Solar Panel
MPPT Solar Controller
Charger/ Inverter
Utility Available
The Moment Utility Is Cut Off
Utility Unavailable
There Is Sunlight, Charging Battery
Mixed Charging Function Is Open
Battery (DC)

2.2 DC□□□□□□□□□□□□□UPS□□□□

□ □□ □□□□□□□□□□□□□□□□□□□□□□□□□□□□□ □□□□□□□□□□□□□□□□□□□□ □□□□□

□□□□ □□□□□□□□

□□□□ 1□□□□□□□□□□□□□□□□□□□□□□□□□□□□□□□□□□□□

□□□□2□□□□□□□□□□ □□□□□□□□□□□□□□□□□□□□□□□□□□□□□□□□ □□

□□□□ 3□□□□□□□□□□□□□□□□□□□□□□□□□□□□□ □□□□□□□□□□□□□□□□□□□□□□□□□□□□□□□□□□ □□□□□□□□

□□ □□□□□□□□□□□□□□

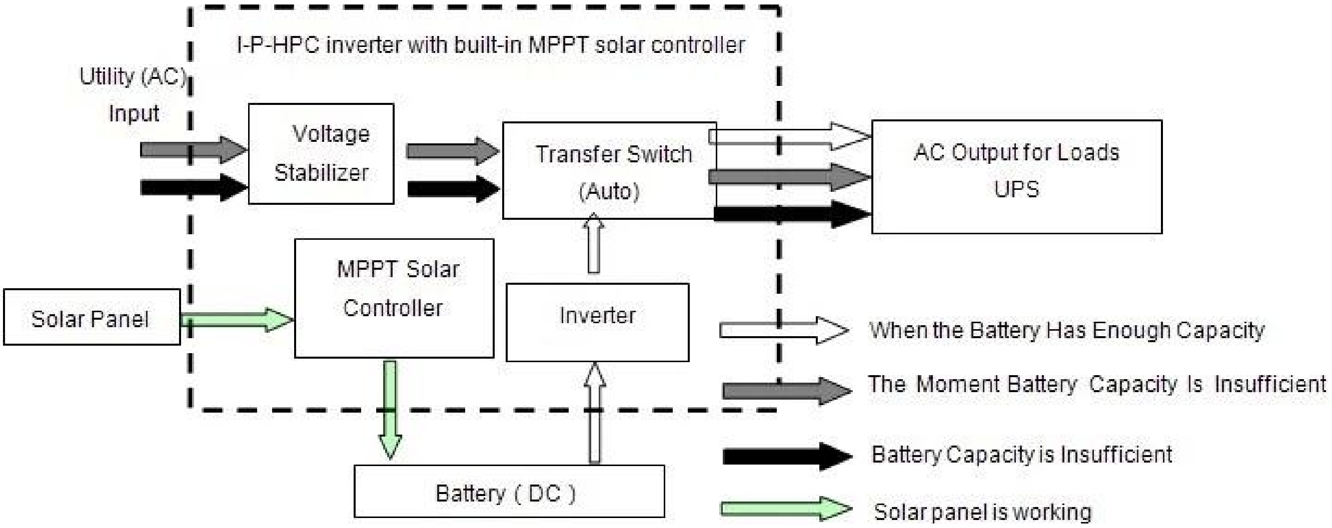

I-P-HPC inverter with built-in MPPT solar controller
Utility (AC)
Input
Voltage
Stabilizer
Transfer Switch
(Auto)
AC Output for Loads
UPS
Solar Panel
MPPT Solar
Controller
Inverter
Battery (DC)
When the Battery Has Enough Capacity
The Moment Battery Capacity Is Insufficient
Battery Capacity is Insufficient
Solar panel is working

3□□□□□□□□

□□□□□□□□□2□□□□□□□□

Using Time
ON/OFF √
Work Mode

Using Time
ON/OFF
Working Mode √

3.1 /□□AC□□□□□□□□□□□□□□□□□□□□□□□□□□□□□□

3.2□□

4□□□/□□□□□□

4.1 □□□□□□□□□□□□□□□□□□□□□□□□□

4.2 □□□□□□□□□□□□□□□□□□□□□□□□□□□□□□□□□□

□□□□□□

□□□ □□□□□□		5000W
□□□□□□		5000W
□□□□□		10000W
□□□□□ □□□□□□		48V
□□□□□□□□□□		
□□□□□□□□□		□□□□□□□□
		PV□+□□□□□□□□
MPPT□□□□□ □□□□□□	□□	48V
	□□□	40A
	□□□□□□□□	100V
	□□□□□□□	95□□99□□
	□□□□□□□□□	2272W
□□□□□□□	AC□□□□	0□15A
	□□□□□	3□□□
□□□□□□□		
AC□□	□□	220V±3□□□□230V±3□□□240V±3□□□□100V±3□ □□□110V□□□□□□□±3□
	□□□	0.5□□□60Hz±0.5□□□□□□□±50Hz□
□□□□		□□□□□□□□□□□ □□□≤3
□□□□□		> 120□ 1□□> 130□10s□
□□□□ □□□□□ □□□□□□		0.65A
□□□□ □□□□□□□□□□□□		1-6W
□□□□□□□□ □□		85□□92□□
□□□□□□□□□□		
AC□□	□□	220V□□□□□□□35□110V 35□□□□□□±
	□□□	□□□□□□□□□□
AC□□	□□	220V±5□□□□110V 5□□□□□□□□□□□□□
	□□□	□□□□□□□□□□
□□□□□		> 120□ 1□□> 130□10s□
□AC□□□□□DC □□□□□□□□		

UPS□□□□□□□		AC□□□□□□□□□□
		DC□□□□□□□□□□
□□□□□□□□		<5ms□□□□ AC□DC / DC□□
□□□□		□□□□□□□
□□□□		□□□□□□/□□□□□□ □□□□□□
□□□□□		
□□□□□□	□□□□□	LCD + LED
	□□□□	□□□□□□□□□□□□ □□□□□□□□□□□□□□□□□□□□□□□□
□□		□□□□□□□□□□□□ □□□□□□□□□□□□□□
□□	□□	-10℃□50℃
	□□	10□□□□□□90□□□□□
	□□	≤4000□□□□
□□□ W×D×H□mm□□		450 * 246 * 468
□□□□□ W×D×H□mm□□		540 * 300 * 518
□□□ □□□kg□		35
□□□ □□□kg□		41

□□□

- □□□□□□□□□□□□□□□□□□□□□□□□□□□□□□
- □□□□□□□□□□□□□□□□□□□□□□□□□□□□□□□□□
- □□□□□□□□□□□□□□□□□□□□□R□D□□□□□□□□□□□□□□□□□□OEM□□□□□□□□□□□

□□□

I-P-HPC-Series System
Solar Panel
DC Output
AC Output
Battery Box
AC Input（not essential）
I-P-HPC-Series Inverter+MPPT Solar Controller

□□

- □□□□□□□□□□□□□□□□□□□□□□□□□□□□□□□□
- □□□□2014□5□15□□□2□□□□□