**I-P-SPC□□□□□□□□ □□□□□□□□□

□□□□□□□□□□□□□□□□

1□ □□□□□□□□□□□□□□□□AC□□□□□□□□□□□□□□□□

□□□□□□□□□□□□□

1□□□□□□□□□□□□□□□□□□□□□□

2□□□□□□□□□□□□□□□□□□□

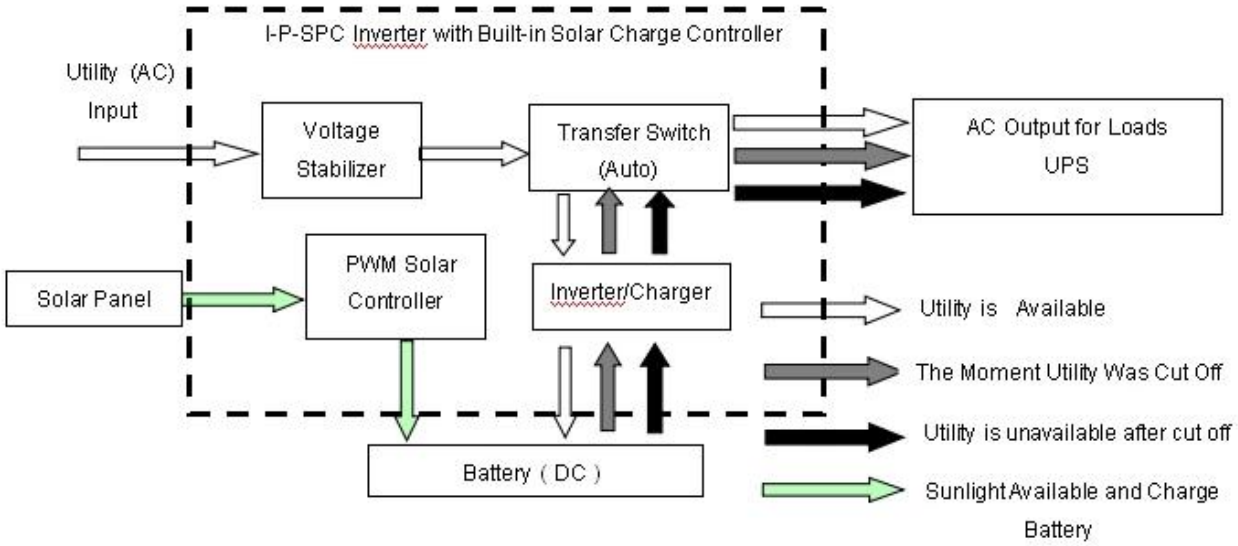

LCD□□□□□□□□□□

Utility supply power and charge battery

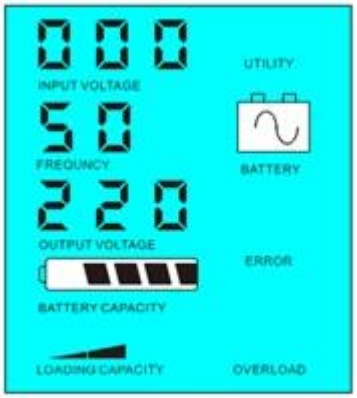

Without utility and battery supply power

□□□□□□□□□□□□□□

1□□□□□2□□□□□□□□□□□□□□

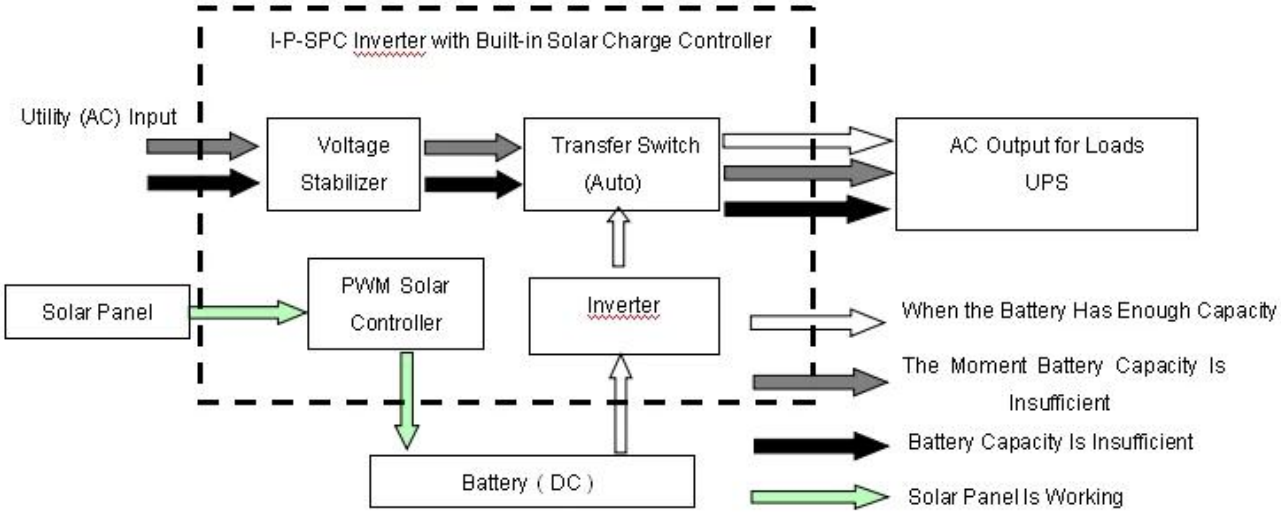

LCD□□□□□□□□□□

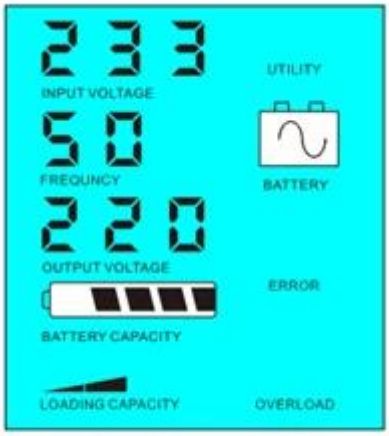

Battery available to supply power

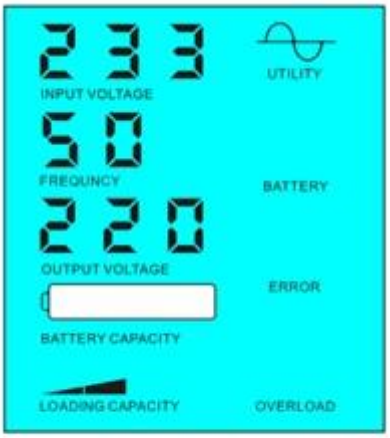

Battery unavailable,utility supply power

□□□□□□□□□□□□□□

1□□□□□□□□□□□□□□

□□□□□ □□□W×D×H□mm□□		440 * 280 * 625
□□□ □□□kg□		31
□□□ □□□kg□		33
□□□□□		
□□□□□ □□□□□□□□	1	□□□□□□□□□□□□AC □□□□□□□□□□□□□□□□□□□□□
	2	□□□□□□□□□□□□□□□□□□□□□□□□□□□□□□□5□□□□□□□□ □□□□□□□□□□□□□□□□□□□□

I-P-SPC-Series System
Solar Panel
DC Output
AC Output
Battery Box
AC Input（not essential）
I-P-SPC-Series Inverter+Solar Controller

□□□

□□□