[illegible]

DC / AC[illegible]AVR[illegible]AC[illegible]UPS[illegible]2[illegible] [illegible] I-P-XD[illegible]

[illegible]

1[illegible]

2[illegible]CPU[illegible]

3[illegible]LCD[illegible]

[illegible]4[illegible]AVR[illegible]UPS[illegible]

[illegible]5[illegible]

6[illegible]

[illegible]7[illegible]5[illegible]

8[illegible]

9[illegible]CE / EMC / LVD / RoHS[illegible]

10[illegible]

[illegible]

1[illegible]DC[illegible]

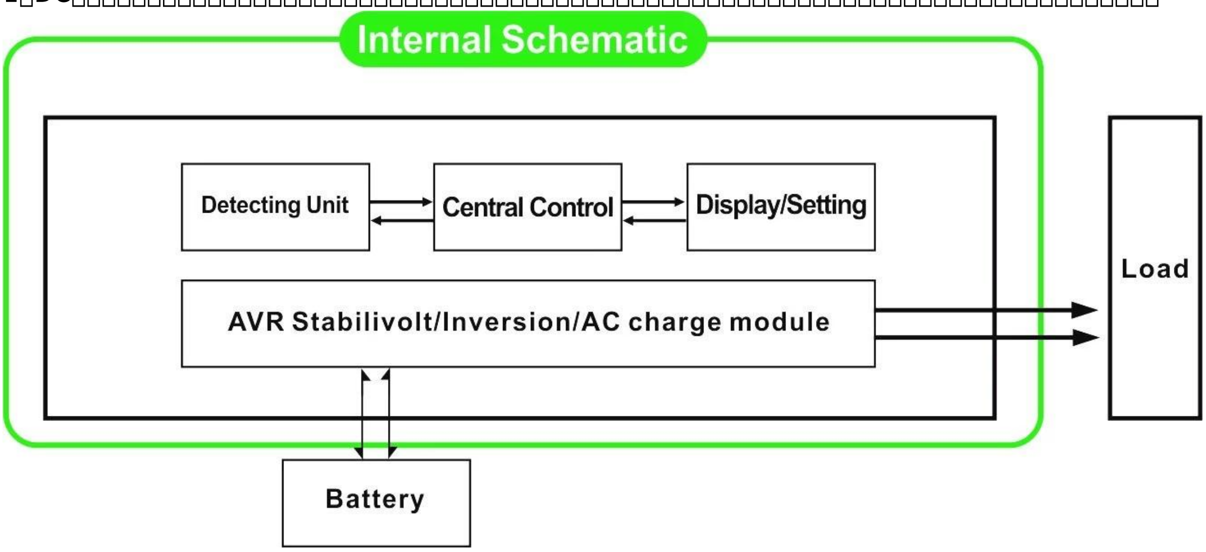


1.1[illegible]LCD[illegible]FREQUNCY[illegible]01[illegible]AC[illegible]AC[illegible]LCD[illegible]

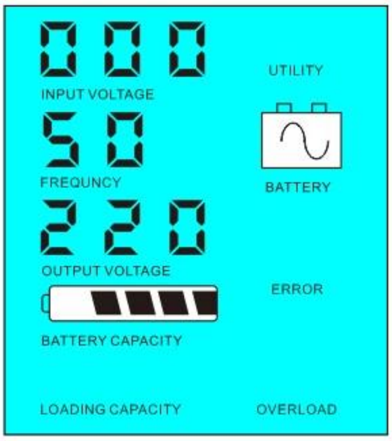


1.2□□□□□□□□LCD□□□□□□□□□□FREQUNCY□□□AC□□□□□□□□□□□□□□□□□□5□□□□□□02.If□□□□□□□□□□□□□□□□□□□□□□□□□□□□□□□□□□□□□□□□□□□□□□□□□□□□□□□□□□□□□□□□1-6W□□□ LCD□□□□□□□□□□□□5□□□□□□□□□□□□□□□□□□□□□□5□□□□□□□□□□□□□□□□AC□DC□□□□□□□□□□□□0□□□□□□□ □· LCD outpu□□□□□□□□□ □□□□□□□□□□□

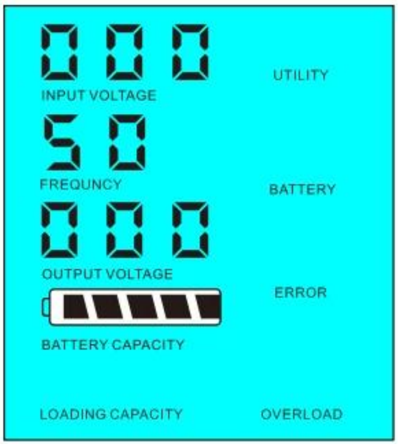


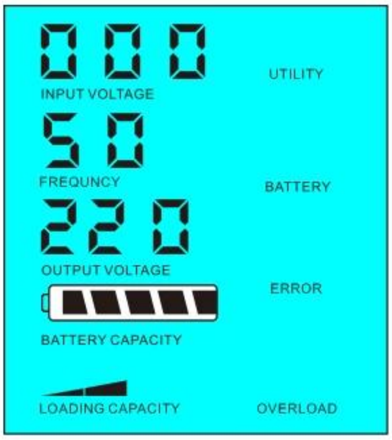


□□□□□□<□□□□□□□□□□□□5□

□□□□□□□□□□□□□□□□□> 5□

2□□□□□□□□□□□□□□□□□□□□□□□□□□□UPS□□□□□□□□□□□□□□□□□□□□□□□□□ □□□□□□□ □□ □□□□AC□□□□□□□□□□□□□□□□□□□□□□□□□□□□DC□□□□□□□□□□□□□□□□□]□□□□

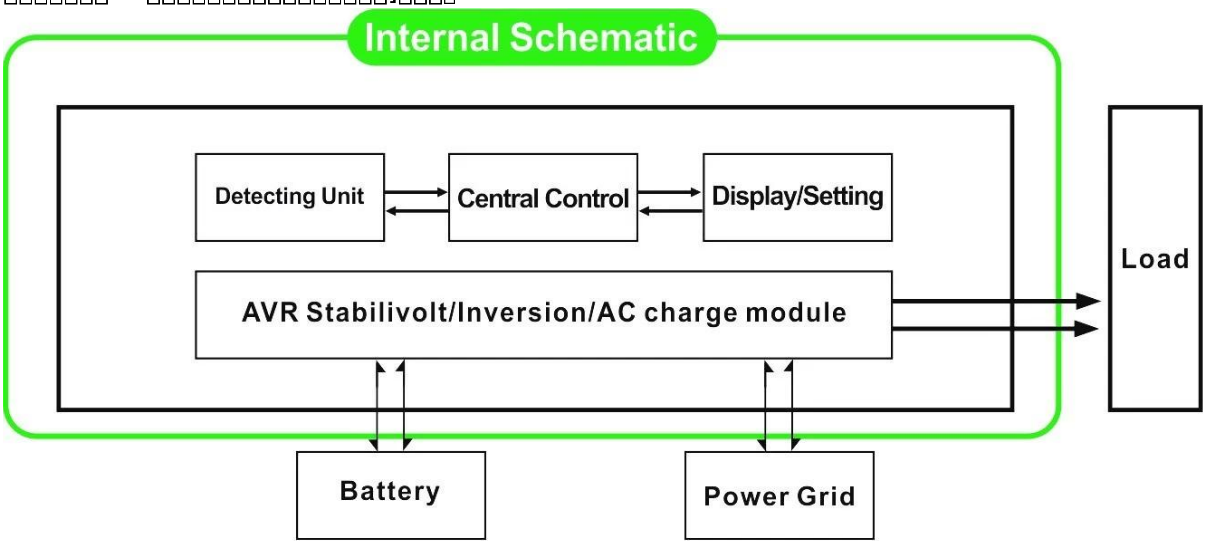


2.1□□□□□□□□□□□□AC□□□□□□□□□□□□□□□□□□□□□□□□□□□□□□□□□□□□□□□□□□□□□□□□□□□□□□□□01□□□□□□□□□□□□□□□□□□□□□□□□□□□□□□□□□□□□□□□□□□□□□□□□□□□□□□□□□□□□□□□□□

□□□□□□□□□□□

□□□□1□□□□□□□□□□□□□□□□□□□□□□□□□□□□□□□□□□□□□□□□□ □□□□□□□□□□□□□□□□□□□□□ □

□□□□2□□□□□□□□□□□□□□□□□□□□□□□□5ms□□□□□□□□□□□□□□□□□□□□□□□□□DC□AC□□□□□□

[illegible]3[illegible]

[illegible]

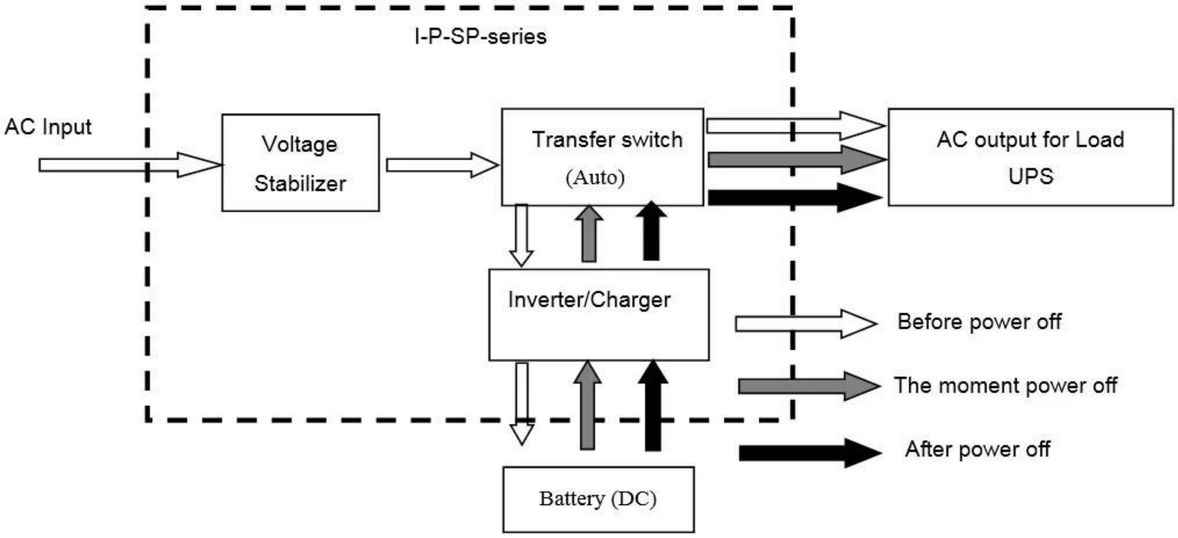


**[illegible]LCD[illegible]**

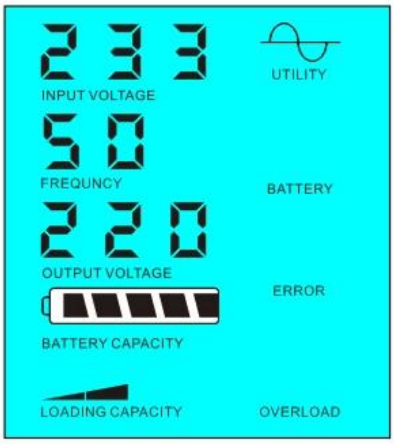


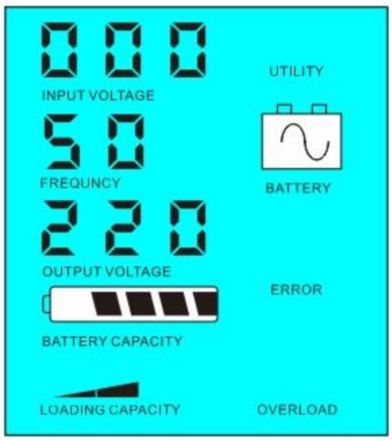


[illegible] [illegible]

2.2[illegible]DC[illegible]UPS[illegible]LCD[illegible]FREQUENCY [illegible]03[illegible]

[illegible]

[illegible]1[illegible]AC[illegible]

[illegible]2[illegible]

[illegible]3[illegible] [illegible][illegible]

[illegible]

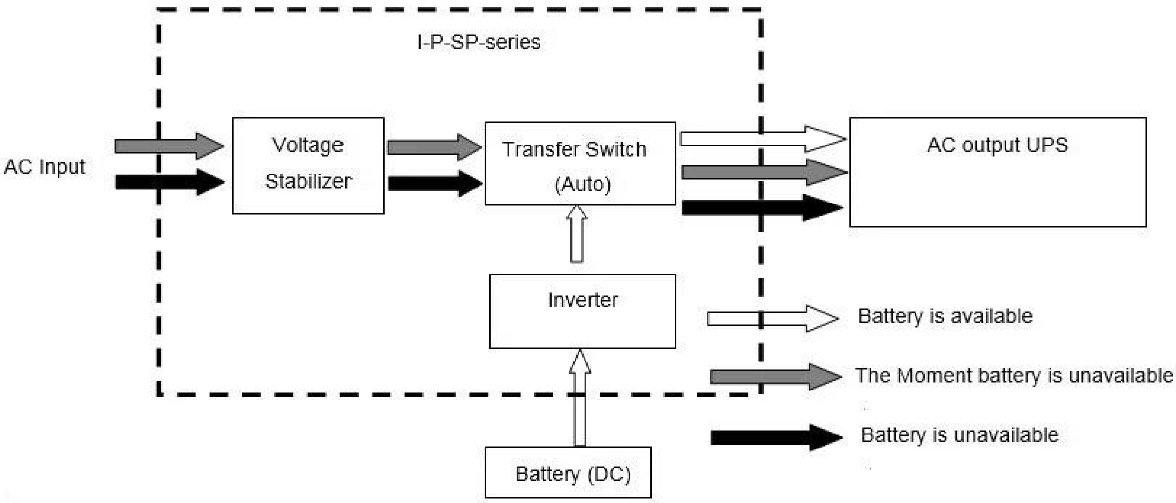


**□□□□□□□□LCD□**

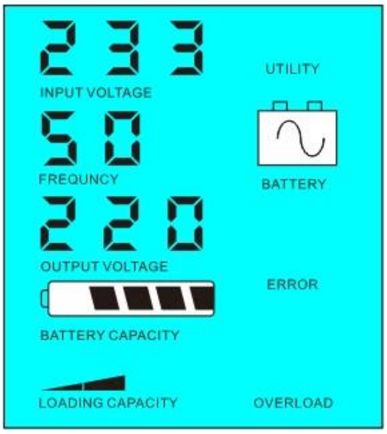


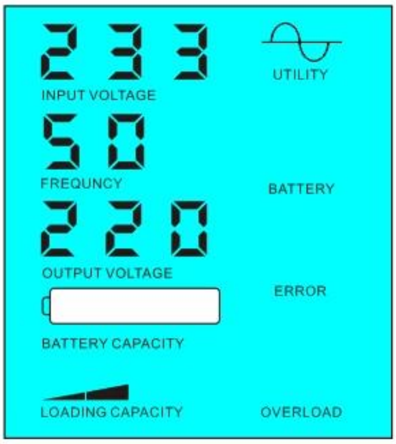


□□□□□□□□□□□□□ □□□□□□□□□□□□□□□□□□□□□□

## □□□□□□

| | | |
|---|---|---|
| □□□□□□□□□ | | 2000VA |
| □□□□□□ | | 1500W |
| □□□□□ | | 3000W |
| □□□□□□□DC□ | | 24V / 48V / 96V□□□□□□□ |
| □□□W×D×H□mm□□ | | 350 * 220 * 460 |
| □□□□□W×D×H□mm□□ | | 370 * 240 * 480 |
| □□□□□kg□□ | | 20 |
| □□□□□□□□□□ | | 22 |
| □□□□□□□ | | |
| □□□□□ | 1 | □□□□□□□□□□AC□□□□□□□□□□□□□□□□□□ |
| □□□□ | 2 | □□□□□□□□□□□□□□□□□□□□□□□□□□□□□□□□5□□□□□□□□□□□□□□□□□□□□□□□□□□□ |
| | 3 | □□□□□□□□□DC□□□□□□□□□□□□□□□□□□UPS□□□ |
| AC□□ | □□ | 220V□□□□□□□35□110V + 35□± |
| | □□□ | 3□□□□60Hz±3□±50Hz□□□□□□□□ |
| AC□□ | □□ | 220V±3□□□□230V±3□□□240V±3□□□□100V±3□□□□110V±3□□□□□□□□ |
| | □□□ | 0.5±0.5□□□60Hz±50Hz□□□□□□□□ |
| □□ | AC□□□□ | 0□15A |
| | □□□□ | □□□□□□□□□□□□□ |
| | □□□□□□ | □□□□□□□□□□□□□□□□□□□□□□□□□ |
| □□□□□□ | □□□□□ | LCD |
| | □□□□□ | □□□□□□□□□□□□□□□□□□□□□□□□□□□□□□□□□□□ |
| □□□□□□□ | | □□□□□□□□□□□□□□□□THD≤3 |
| □□□□□ | | > 120□1□□> 130□□10S |
| □□□□ | □□□□□□□ | 1□6W |
| | □□□□□ | 1□□3□a□ |

| | | |
|---|---|---|
| □□□□ | | □90□□80□ |
| □□□□ | | <5ms□□DC / DC□AC□AC□ |
| □□ | | □□□□□□□□□□□□□□□□□□□□□□ |
| | □□ | -10℃□50℃ |
| □□ | □□ | □90□□10□ |
| | □□ | ≤4000m |

□□□□□□□□□□□□□□□□□□□□□
D□□□□□□□□□□□□□□□□□□□□□·R&□□□□□□□
□□□□□□□OEM ODM□□□□□□□□□□
□□□
□□□□□□□□□□□□□□□□□□□□etc.Research□□□□2014□5□5□□2TH□□□□□□□□□□□□□