Introduction

This series of product is a module design of inverter and built-in MPPT controller, which has the advantages of high conversion efficiency, low power consumption and strong load-carrying ability. With intelligent control, customers can set charging mode, (Utility as complementary power) AC first mode or DC first mode, timed inversion mode and timed utility mode, timed on/off sleep mode. This is the currently the most advanced inverter & controller hybrid in the world.

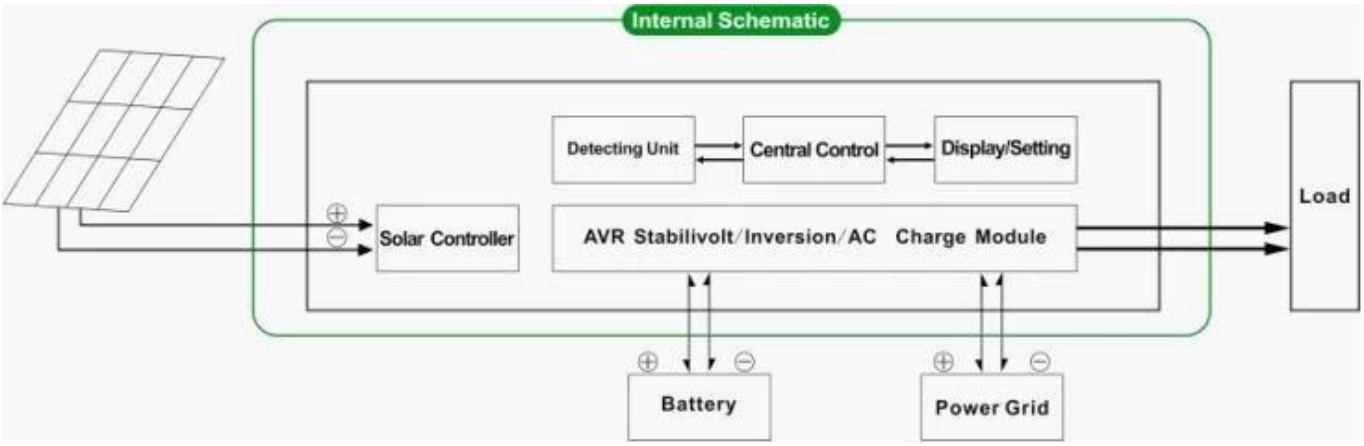

Application

- Off-grid solar power system
- Solar power system with utility as complementary power

Feature

- Easy to install. To configure a solar system, customers only need to connect it with solar panels and batteries
- CPU management ,intelligent control□modular design, User-friendly LCD display
- Built-in MPPT controller, high charging efficiency
- Low power consumption, high conversion efficiency
- Intellectual□multi-function, convenient for customers with different using environment to fully use the solar energy
- External battery connection, convenient to expand back-up power time
- Strong load-carrying ability, low failure rate, easy maintenance and long service life (under proper operation, it may be as long as 5 years)
- Perfect protection: low voltage protection, over voltage protection, overheat protection, short-circuit protection, overloads protection
- CE / EMC / LVD/ RoHS Approvals
- Two years warranty, life-long technical supports.

Function

1.Charging function

1.1 PV charge the battery, utility will not: when PV and utility are both connected to the machine, only the PV will charge the battery when there is sunlight

1.2 Both PV and utility will charge the battery: when PV and utility are both connected to the machine, AC (utility) will charge the battery. In the meanwhile,

PV will also charge the battery if there is sunlight.

2.Utility as complementary power function

2.1 AC first , DC standby UPS mode

When both utility and battery are connected to the machine, utility will supply power to the loads prior to the battery. When utility is cut off, the battery will automatically

continue to supply power.

2.2 DC first, AC standby UPS mode

When both utility and battery are connected to the inverter, battery will supply power to the loads prior to utility. When battery capacity is not enough, utility will continue to

supply power automatically.

3.Timing function

3.1 Timed on/off normal working mode and sleep mode: can set specific time when to open normal output and when to close AC output to enter sleep mode.

3.2 Battery and utility switchable mode: can set specific time when to use battery or utility supply power (suitable for areas where electric fee is charged according to

period in different intervals).

4.Recording/checking function

4.1 Machine fault checking: can check the machine fault information.

4.2 Discharge time checking: can check the discharge time of the battery.

Parameter

Parameter Model		**1500W**
Rated Output Power		1500W
Peak Power		3000W
Battery (Lead-acid battery)		24V/48V(optional)
Charging Parameter		
Charge Mode(setting)		PV charge
		PV charge + utility charge
MPPT Solar Controller	Voltage	24V/48V
	Current	25A
	Max PV Input Voltage	100V
	PV Charge Efficiency	95%~99%
	Max PV Input Power	24V 710W
		48V 1420W
Utility	AC Charge Current	0~15A
	Charge Mode	3-Stage Charging
Inversion parameter		
AC Output	Voltage	220V±3% or 230V±3 or 240V±3% or 100V±3% or 110V±3% (optional)
	Frequency	50Hz±0.5 or 60Hz±0.5 (optional)
Output wave type		Pure sine wave output, waveform distortion rate≤3
Overload ability		120% 1 min, 130% 10s
Power Consumption (under normal working mode)		24V: 0.5A
		48V: 0.4A
Power Consumption (under sleep mode)		1-6W
Inverter Conversion Efficiency		85%~92%
Utility Mode		
AC Input	Voltage	220V±35% or 110V+35%(optional)
	Frequency	The same as utility
AC Output	Voltage	220V±5% or 110V+5%(optional)
	Frequency	The same as utility
Overload Ability		120% 1 min 130% 10s
(AC first or DC first) priority		
UPS Output(setting)		AC first, DC standby
		DC first, AC standby
Switch Time		5ms (AC to DC / DC to AC)
Power On (setting)		Set by users
		Timed open / close AC output automatically
General Parameter		
Display	Display Mode	LCD+LED
	Display Information	Input voltage, output voltage, output frequency, battery capacity, Load condition, Status Information
Protection		Overload output, short-circuit, high-voltage input, low-voltage input, overheat
Environment	Temperature	-10℃ 50℃
	humidity	10% 90%
	Altitude	≤4000m
Size W×D×H(mm)		438*208*413

Packing Size W×D×H(mm)	520*310*460
Net Weight (kg)	17
Gross Weight (kg)	18

Products photos

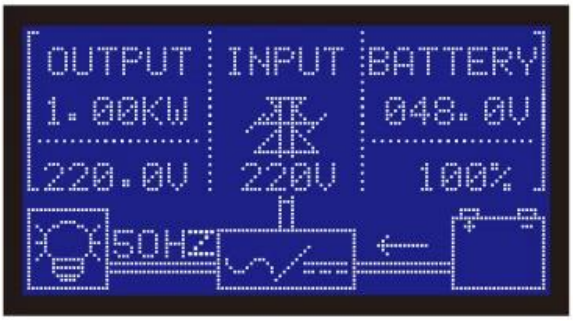
OUTPUT
INPUT
BATTERY
1.00KW
048.0V
220.0V
220V
100%
50HZ

CONT
048.0V 1.00KW 020.0A
GENERATING CAPACITY
TOTAL : 0000KW.H

Rs232
Output socket
Max 10A
Solar Input
DC Output
Battery Switch
Fuse
Press reset
Battery
Ac input
Ac output
Rs232
Battery Switch
AC Input Switch
Solar Input
DC Output
Battery input

I-P-HPC-Series System

I-P-HPC-Series Inverter+Solar Controller