Introduction

I-P-TPI2-1000W-6000W is adopted the world's leading low-frequency inversion technical solutions. This series of inverter has the advantages of high conversion efficiency, low power consumption, super load-carrying ability, and large charging current. Users can set it to sleep mode and normal working mode according to the AC loads. Users also can set the output priority (AC first or DC first) and choose the output frequency 50Hz or 60Hz. It’s our second generation TPI series.

Features

1. Pure sine wave output

2. CPU management, intelligent control□modular design

3. LCD and LED display can show the parameters and inverter working status.

4. Users can set it in sleep mode or normal working mode and set output priority (AC first or DC first). The output frequency (50Hz or 60Hz) can be chosen.

5. High conversion efficiency (87%-98%), low power consumption (1W~6W under sleep mode). It is the best choice of inverters for solar power system

6. The inverter can charge 8 kinds of batteries such as sealed lead acid battery, open lead-acid battery, gel battery. Kindly note: The lithium battery can be charged also, the related parameters need to be set in factory.

7. High charging power and the charging function can be closed

8. This series of inverters have strong load-carrying ability and overload capacity. The peak power is 3 times of the rated output power. For example, 1KW model can drive 1HP air conditioner, 2KW model can drive 2HP air conditioner, 3KW can drive 3HP conditioner.

9. Adopting the latest American low frequency circuit design, brand new imported electric materials, pure copper transformer, and the system is very stable long service life (more than 5 years under normal use)

10. Perfect protection (low input voltage protection, high input voltage protection, over temperature protection, short-circuit protection, overload protection)

11. EMC□LVD□RoHS certification approvals

12. 2-year warranty and life-time technical assistance.

Function

1. DC/AC Conversion Function

It can be set to normal working mode (on the panel turn the button to “ON”) or sleep mode (on the panel turn the button to S-ON)

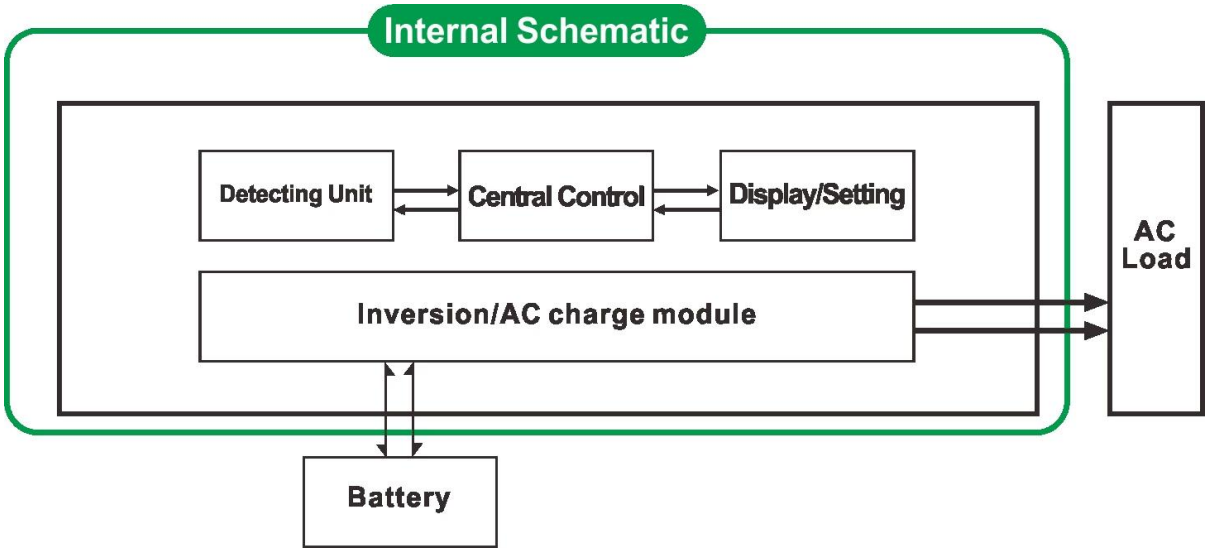

1.1 Normal working mode (ON): No matter it’s connected AC loads or not
the inverter always convert DC to AC. The LCD of the inverter displays the output voltage. The power consumption in normal working mode is a little higher than in sleep mode
1.2 Sleep mode (S-ON)If the power of the connected AC loads is lower than 5% of the rated power of the inverter, there is no output from the inverter. The LCD of it shows 0. Only the chip of inverter is working. The power consumption of the inverter is only 1-6W. If the power of the connected AC loads is more than 5%, then the inverter automatically convert DC to AC to supply power for the loads within 5s. The LCD of it displays no output.

2. High-power intelligent charging function
It Can charge 8 kinds of batteries (detail please check parameter)
High charging power (detail please check parameter)
Three-stage charging mode: Constant current charging stage (CC), Constant voltage charging stage (CV), Float charging stage (CF)

Note: When the battery type is set to “0”, it will not charge the battery and charging current is “0”. The charging indicator will not light.

3. UPS function
It can be set as utility first (AC first) battery standby mode or battery first(DC first) utility standby mode.

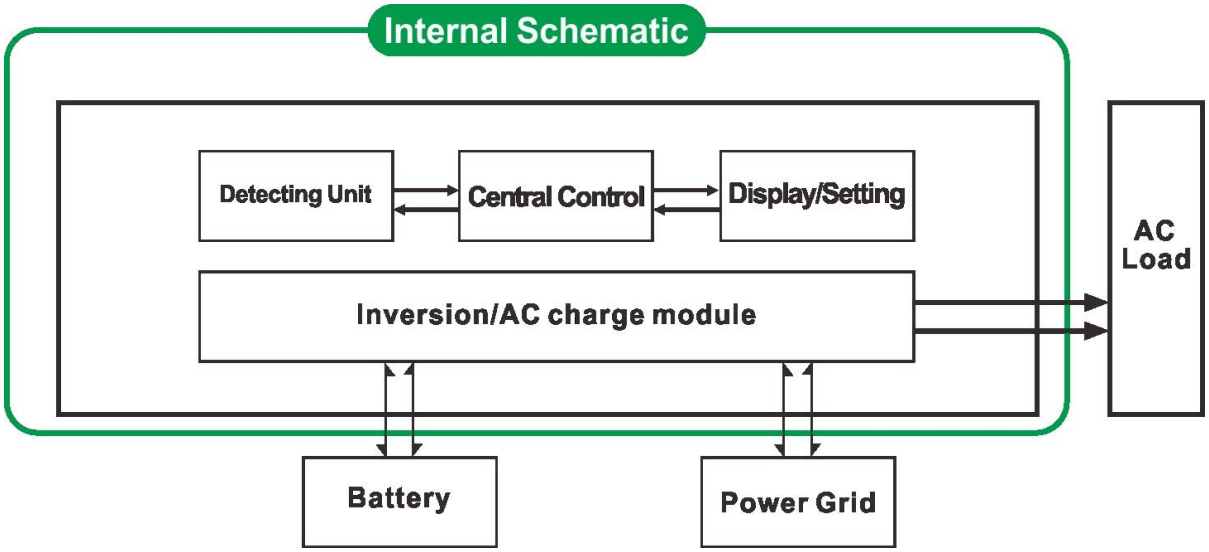

3.1. Utility first battery standby UPS mode (on the panel turn the button to “AC”)
When utility and battery are connected to the inverter, utility will supply power to the loads prior. When utility is cut off, the battery will automatically continue to supply power via power inverter.
Steps are as below:
Step 1: When utility is available, it will drive the loads directly and at the same time charge batteries.(battery type on the panel can not be 0) LCD will display AC output voltage.
Step 2: When utility power is cut off, the inverter will convert DC power (battery) to AC power automatically to ensure uninterrupted power supply within 5ms. UPS function
Step 3: When utility is available again, inverter will automatically transfer to utility supplying power to loads. And utility will charge batteries via power inverter at the same time.

See Workflow as below.

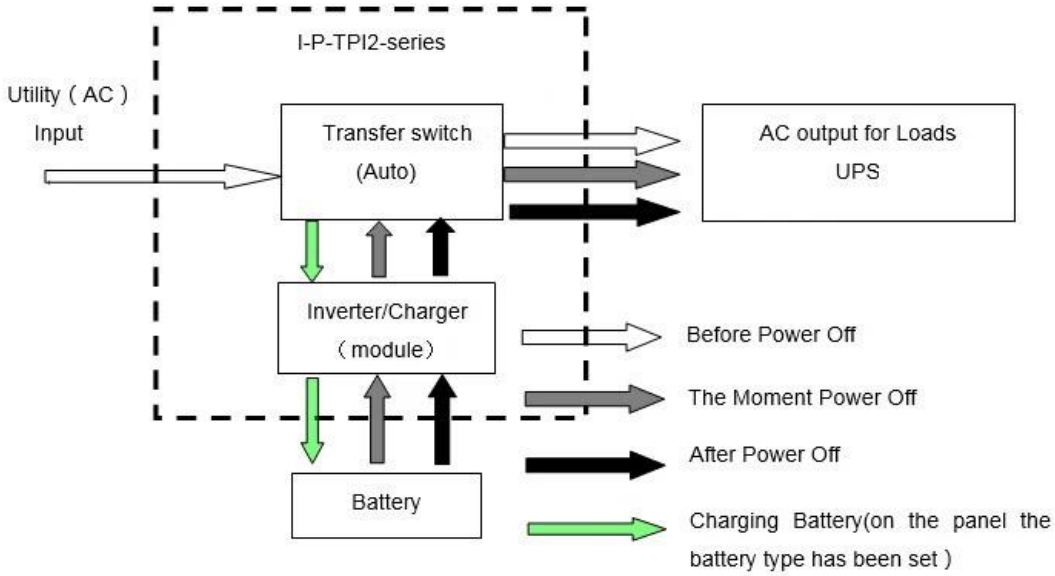

3.2. Battery first utility standby UPS mode (on the panel turn the button to “DC”).

In this mode, users need to set “battery type” to “0”on the panel. Utility will not charge the battery.

When utility and battery are connected to the inverter, battery will

supply power to the loads prior. When battery capacity is not

enough, utility will continue to supply power to the loads automatically.

Steps are as follows:

Step 1: When battery has enough power, it will supply power to the loads directly

Step 2: When battery does not have enough power, inverter will automatically transfer to utility supplying power to the loads

Step 3: After the battery is fully charged (e.g. by solar or wind charge controller), it will automatically transfer to battery supplying power to the loads via power inverter.

See Workflow as below.

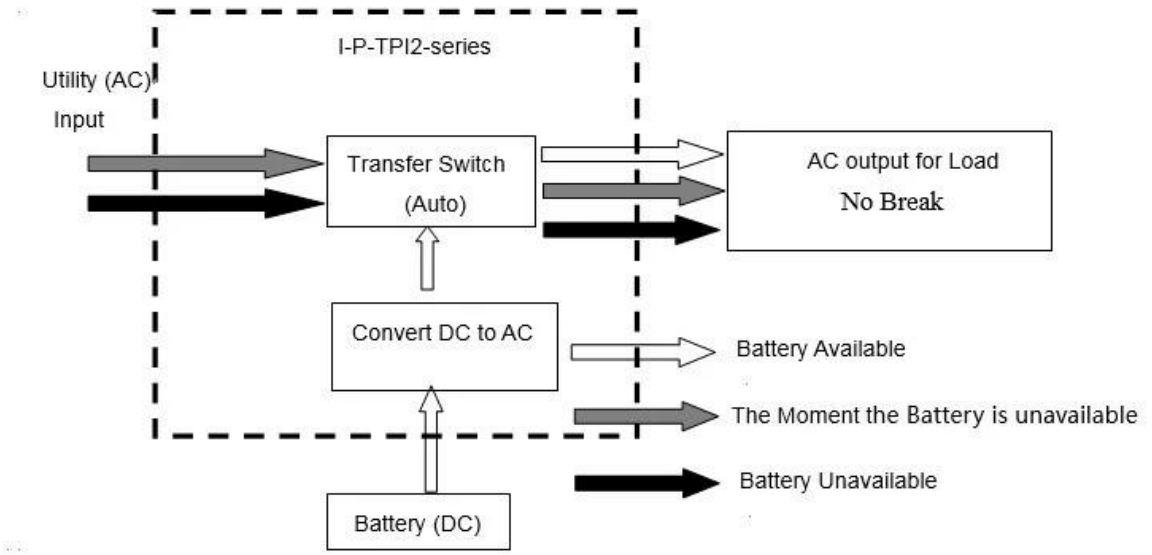

Parameter

Parameter Model		1000W	2000W	3000W	4000W	5000W	6000W
Rated Output Power		1000W	2000W	3000W	4000W	5000W	6000W
Peak Power		3000W	6000W	9000W	12000W	15000W	18000W
Battery Voltage(DC)		12V or 24V or 48V(optional)			24V or 48V(optional)		
Size W×D×H(mm)		318*218*368			440*218*400		
Packing Size W×D×H(mm)		395*275*520			520*275*520		
Net Weight (kg)		27	28	30	39	40	51
Gross Weight (kg)		29	30	32	43	48	53
Working Mode Setting	ON	Normal working mode					
	S-ON	Sleep Mode.1-6W consumption When load's power higher than 5% rated output power, it will start to work automatically					
	OFF	Completely off					
AC Input	Voltage	220V±35% or 110V+35%(optional)					
	Frequency	50HZ or 60HZ					
AC Output	Voltage	220V±3% or 230V±3 or 240V±3% or 100V±3% or 110V±3%(optional)					
	Frequency	Frequency is the same as utility's frequency in utility mode. Frequency 50Hz or 60Hz(optional) in DC/AC convert mode					

Utility Charging (Battery type “0” means that AC charging function is closed)	AC Charge Current (Max)	BAT	1000W	2000W	3000W	4000W	5000W	6000W
		12V	35A	65A	75A	/	/	/
		24V	20A	35A	45A	65A	70A	75A
		48V	10A	15A	30A	35A	40A	50A
	Battery Type		American Gel Battery, Wool Battery 1, Wool Battery2, Sealed Lead Acid Battery, Europe Gel Battery, Open Lead Acid batteries, Calcium Battery, De-Acid Battery or OEM Battery					
	Charging Mode		Three-stage charging（CC, CV, CF					
	Charging Time		Decided by battery capacity and quantity					
	Battery Protection		Automatic detection（charge and discharge protection, intelligent management					
UPS Priority	AC		Utility first, battery standby					
	DC		Battery first, utility standby					
Display	Display Mode		LCD+LED					
	Display Information		Input voltage（output voltage（output frequency（battery capacity（Load condition（Status Information					
Output Wave Type			Pure sine wave					
Overload Ability			（120% 1 min）（130% 10s					
Power Consumption	Sleep Mode		1~6W					
	Normal Mode		1~3A					
Conversion Efficiency			87%~98%					
Transfer Time			（5ms （AC to DC / DC to AC）					
Protection			Overload output（short-circuit（high-voltage input（ low-voltage input（overheats					
Environment	Temperature		-10℃（50℃					
	Humidity		10%（90%					
	Altitude		≤4000m					

Power Inverter
Power Inverter

BAT Type
S-ON
AC
50HZ
AC
60HZ
DC
Inverter
Charger
Next Page
Alarm
OFF
ON
S-ON
Power Inverter

DC-
DC+
DC INPUT
12V 24V 48V
Remote Port
AC OUTPUT
MAX 5A
AC INPUT AC OUTPUT
L N E L N E
Inverter Output Protect
Charger Input Protect
DC-
DC+
DC INPUT
12V 24V 48V
Remote Port
AC OUTPUT
MAX 5A
AC INPUT AC OUTPUT
L N E L N E
Inverter Output Protect
Charger Input Protect

DC−
DC+
DC INPUT
12V 24V 48V
Remote Port
AC OUTPUT
MAX 5A
AC INPUT
AC OUTPUT
L N E L N E
Inverter
Output Protect
Charger
Input Protect

200A
200A