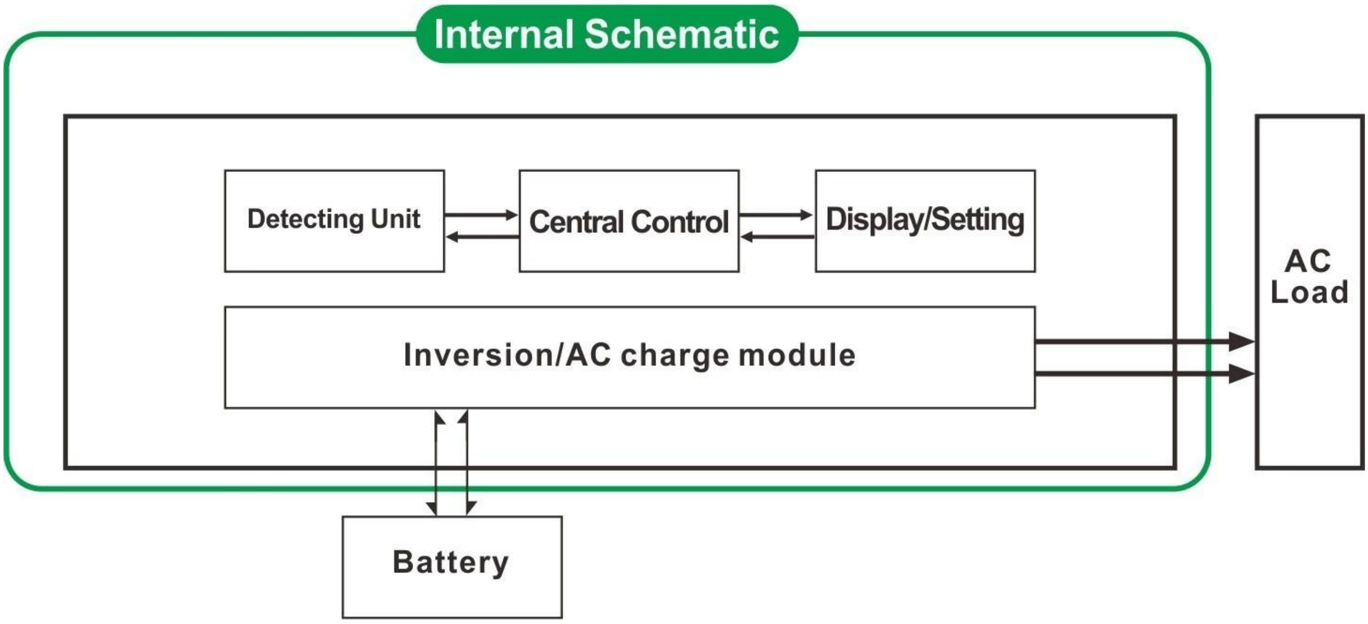

这 电源逆变器 系列I-P-TPI2-1000W-6000W采用世界领先的低频率倒置的技术方案本系列变频器具有高转换效率，低功耗，超强的承载能力，和大的充电电流的优点。。用户可以将其设置为睡眠模式，并根据该交流负载的正常工作模式。用户还可以设置输出的优先级（第一交流或直流第一），并选择输出频率为50Hz或60Hz。这是我们的第二代TPI系列。他们是为太阳能，风能发电系统，家用，办公后备式UPS电源，直流到交流项目的最佳选择，让24小时有动力。应用领域，该系列变频器是适用于各种感性负载，容性负载和阻性负载，如电视，空调，冰箱和洗衣机。

应用

工业，商业，家用后备电源supplyMovable AC供电

主供电的工业产品

离网能源发电系统

功能

1.DC /交流转换功能

它可以被设置为正常工作模式（在面板上开启按钮为“ON”）或睡眠模式（在面板上开启按钮，S-ON）

1.1正常工作模式（开）：不管它连接交流负载或不

逆变器始终将直流电转换为交流电。逆变器的液晶显示输出电压。在正常工作模式下的功耗比睡眠模式高一点

1.2休眠模式（S-ON）：如果所连接的交流负载的功率逆变器的额定功率低于5%，不存在从变频器输出。它的液晶显示屏上显示0。只有逆变器的芯片工作。逆变器的功耗仅为1-6W。如果所连接的交流负载的功率是5%以上，则逆变器自动转换的DC到AC供电为5s内的载荷。它的液晶显示无输出。

2，大功率智能充电功能

1）可充电8种电池（详细请查看参数）

2）高功率充电（详情请查看参数）

3）三阶段充电模式：恒流充电阶段（CC），恒压充电阶段（CV），浮充电阶段（CF）

注意：当电池类型被设置为“0”时，它不会对电池进行充电和充电电流为“0”。充电指示灯不会亮起。

3，**UPS**功能

它可以被设置为工具第一（AC第一）电池的待机模式或电池的第一（DC头）实用待机模式。

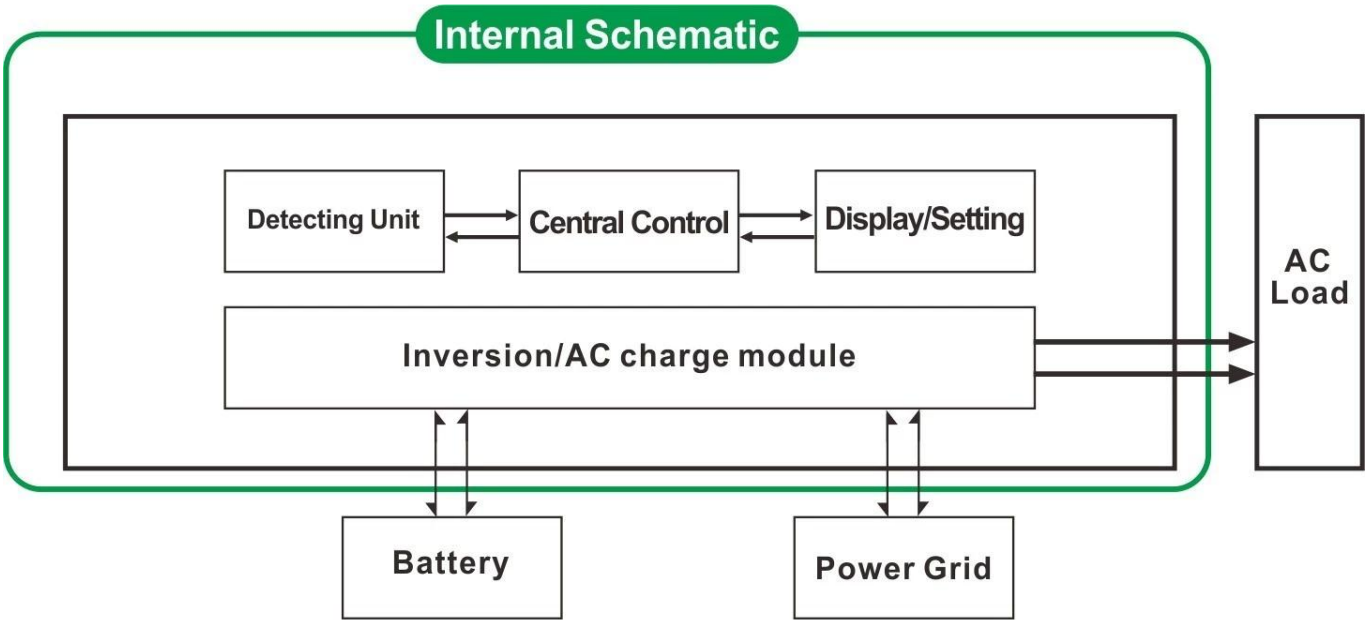

3.1。实用第一，电池后备式UPS模式（在面板上开启按钮，“AC”）

3.2。电池第一，实用后备式UPS模式（在面板上开启按钮，“DC”）。

产品特点

1，纯正弦波输出

2，CPU的管理，智能化控制，模块化设计

3，LCD和LED显示，可显示的参数和逆变器的工作状态。

4，用户可在睡眠模式或正常工作模式，并设置输出的优先级（第一交流或直流在前）设置。输出频率（50Hz或60Hz）可以选择。

5，转换效率高（87%-98%），低功耗（在睡眠模式下1W~6W）。它是逆变器的太阳能发电系统的最佳选择

6，逆变器可以充8种电池如密封式铅酸蓄电池，开放式铅酸电池，胶体电池。请注意：锂电池，也可以充电，相关的参数需要在工厂进行设置。

7，高充电电源和充电功能可以被关闭

8，本系列变频器具有较强的承载能力和过载能力。峰值功率是额定输出功率的3倍。例如，1KW模型驱动1HP空调，2KW模型可以驱动2匹空调，3KW可以驱动3HP机。

9，采用美国最新的低频电路设计，全新进口电热材料，纯铜变压器，系统非常稳定，使用寿命长（正常使用情况下5年以上）

10，完善的保护功能（低输入电压保护，高输入电压保护，过温度保护，短路保护，过载保护）

11，EMC，LVD，RoHS认证许可

12，2年保修，终身提供技术援助。

SPEcification

参数 型号		5000W
额定输出功率		5000W
峰值功率		15000W
电池电压（DC）		24V或48V（可选）
尺寸宽×深×高（mm）		440 * 218 * 400
包装尺寸宽×深×高（mm）		520 * 275 * 520
净重（千克）		40
毛重（公斤）		48
工作模式（设置）	开	正常工作模式
	S-ON	睡眠模式，1~6W消费 当负载功率大于5%额定输出功率，它会开始自动工作
	关闭	完全关闭
AC输入	电压	220V±35%或110V + 35%（可选）
	频率	50HZ或60HZ
AC输出	电压	220V±3%或230V±3或240V±3%或100V±3% 或110V±3%（可选）
	频率	频率是一样的在市电模式 频率50Hz或60Hz（可选）的DC / AC转换模式

公用事业收费（电池类型“0”的 指充电功能关闭时）	交流充电电流（MAX）	24V	48V
		70A	40A
	电池类型	美国 胶体电池，羊毛电池1，羊毛电池2，密封铅酸电池，欧 胶体电池，开放式铅酸蓄电池，电池钙，德铅酸电池或OEM笔记本电池	
	充电模式	三阶段充电: CC, CV, CF卡	
	充电时间	由电池容量和数量决定	
	电池保护	自动检测，充 放电保护，智能管理	
UPS 优先	交流	实用第一，电池待机	
	直流	电池 第一，实用待机	
显示	显示模式	LCD + LED	
	显示信息	输入 电压，输出电压，输出频率，电池容量，负载条件下，状态信息	
输出波型		纯正弦波	
超载能力		> 120%1分钟，> 130%10秒	
功耗	睡眠模式	1~6W	
	普通模式	1~3A	
转换效率		87%~98%	
转换时间		<5毫秒（AC到DC / DC到 交流）	
保护		过载输出，短路，高电压输入， 低电压 输入，过热	
环境	温度	-10℃~50℃	
	湿度	10%~90%	
	海拔高度	≤4000m	

证书

MS CERT

Certificate Of Registration

QUALITY MANAGEMENT SYSTEM

This is to Certify that the Quality Management System
of

SHENZHEN I-PANDA NEW ENERGY TECHNOLOGY & SCIENCE CO., LTD.

Address:
Block H, Juyin Technology Industrial Park, Buji St., Longgang Dist., Shenzhen, 518000, Guangdong, China.

has been assessed and found to comply with the requirements of:

ISO 9001:2008

(Quality Management System)

Clause 7 permissible Exclusions: Nil

Scope of Certification:

Design, Production and Sales of Power Inverter, Solar Controller, Solar Generator System and UPS.

Sector Code: (ANZSIC CODE: 2859)

Certificate Number: CHIN/TW/QMS/00119

Issue no.: 01

Date of approval : 05.07.2014
Revision no: nil

Valid until : 04.07.2017
Revision date : nil

Original Certification Date: 05.07.2014

May 2015
Surveillance Audit 1st Year

Managing Director

May 2016
Surveillance Audit 2nd year

MS CERTIFICATION SERVICES PVT. LTD.

www.mscertification.net

The Certificate is Valid Only if the Annual Surveillance Mark is Signed by Auditor on Original.

P16Rev01

MS CERT

Certificate Of Registration

ENVIRONMENTAL MANAGEMENT SYSTEM

This is to certify that the Environmental Management System

of

SHENZHEN I-PANDA NEW ENERGY TECHNOLOGY & SCIENCE CO., LTD.

Address:

Block H, Juyin Technology Industrial Park, Buji St., Longgang Dist., Shenzhen, 518000, Guangdong, China.

has been assessed and found to comply with the requirements of:

ISO 14001:2004

(Environmental Management System)

Scope of Certification:

Design, Production and Sales of Power Inverter, Solar Controller, Solar Generator System and UPS.

Sector Code: (ANZSIC CODE: 2859)

Certificate Number: CHIN/TW/EMS/00028

Issue no.: 01

Date of approval : 05.07.2014 *Valid until : 04.07.2017*

Revision no: nil *Revision date : nil*

Original Certification Date: 05.07.2014

May 2015

Surveillance Audit 1st Year

Managing Director

May 2016

Surveillance Audit 2nd year

MS CERTIFICATION SERVICES PVT. LTD.

www.mscertification.net

The Certificate is Valid Only if the Annual Surveillance Mark is Signed by Auditor on Original.

P60EMSRev.02

Best Service of Testing
since2003

Certificate of Compliance

Certificate NO. : BST14050326Y-1EC-1

Applicant	:	**SHENZHEN I-PANDA NEW ENERGY TECHNOLOGY & SCIENCE CO., LTD.** Bolck H, Juyin Technology Industrial Park, Buji St., Longgang Dist., Shenzhen, Guangdong, China
Manufacturer	:	**SHENZHEN I-PANDA NEW ENERGY TECHNOLOGY & SCIENCE CO., LTD.** Bolck H, Juyin Technology Industrial Park, Buji St., Longgang Dist., Shenzhen, Guangdong, China
Product Name	:	**PURE SINE WAVE INVERTER WITH CHARGER AND UPS**
Trade Name	:	**I-PANDA**
Main Test Model	:	**I-P-TPI-6000W**
Additional Model	:	**I-P-TPI-1000W, I-P-TPI-2000W, I-P-TPI-3000W, I-P-TPI-4000W, I-P-TPI-5000W**
Test Standard	:	**EN 55022:2010** **EN 61000-3-2:2006+A1:2009+A2:2009** **EN 61000-3-3:2013** **EN 55024:2010**
As shown in the Test Report No.	:	**BST14050326Y-1ER-1.**

The EUT described above has been tested by us with the listed standards and found in compliance with the council EMC directive 2004/108/EC. It is possible to use CE marking to demonstrate the compliance with this EMC Directive.
The certificate applies to the tested sample above mentioned only and shall not imply an assessment of the whole production.

CE

SHENZHEN BST TECHNOLOGY CO.,LTD. APPROVED

.....
Christina
Manager
May 20, 2014

Shenzhen BST Technology Co.,Ltd.
Add: Building No.23-24, Zhiheng Industrial Park, Guankouer Road, Nantou,Nanshan District,Shenzhen,Guangdong,China
Certificate Search: http://www.bst-lab.com, Tel:400-882-9628, 8009990305, E-mail:christina@bst-lab.com

Best Service of Testing
since2003

Certificate of Compliance

Certificate NO.	:	**BST14050326Y-1SC-2**
Applicant	:	**SHENZHEN I-PANDA NEW ENERGY TECHNOLOGY & SCIENCE CO., LTD.** Bolck H, Juyin Technology Industrial Park, Buji St., Longgang Dist., Shenzhen, Guangdong, China
Manufacturer	:	**SHENZHEN I-PANDA NEW ENERGY TECHNOLOGY & SCIENCE CO., LTD.** Bolck H, Juyin Technology Industrial Park, Buji St., Longgang Dist., Shenzhen, Guangdong, China
Product Name	:	**PURE SINE WAVE INVERTER WITH CHARGER AND UPS**
Trade Name	:	**I-PANDA**
Main Test Model	:	**I-P-TPI-6000W**
Additional Model		**I-P-TPI-1000W, I-P-TPI-2000W, I-P-TPI-3000W, I-P-TPI-4000W, I-P-TPI-5000W**
Test Standard	:	**EN 60950-1:2006+A11:2009+A1:2010+A12:2011**
As shown in the Test Report No.	:	**BST14050326Y-1SR-2**

The EUT described above has been tested by us with the listed standards and found in compliance with the council LVD directive 2006/95/EC. It is possible to use CE marking to demonstrate the compliance with this LVD Directive.
The certificate applies to the tested sample above mentioned only and shall not imply an assessment of the whole production.

SHEN BST TECHNOLOGY CO. APPROVED

Christina
Manager
May , 25, 2014

Shenzhen BST Technology Co., Ltd.
Add:Building No.23-24,Zhiheng Industrial Park,Guankouer Road,Nantou,Nanshan District,Shenzhen,Guangdong,China
Certificate Search: http://www.bst-lab.com, Tel: 400-882-9628, 8009990305, E-mail:christina@bst-lab.com

Best Service of Testing
since2003

FCC VERIFICATION OF CONFORMITY

BST14050326Y-1EC-3

We herewith confirm the following designated product:

Product Name: PURE SINE WAVE INVERTER WITH CHARGER AND UPS
Trade Name: I-PANDA
Main Test Model. : I-P-TPI-6000W
Additional Model: I-P-TPI-1000W, I-P-TPI-2000W, I-P-TPI-3000W, I-P-TPI-4000W, I-P-TPI-5000W

(Product Identification)

has been tested and found in compliance with the requirements of 47 CFR PART 15 regulation & ANSI C63.4 for the evaluation of Class B of electromagnetic compatibility. It is only valid in connection with the test report number: BST14050326Y-1ER-3.

This device complies with Part 15 of the FCC rules,operation is subject to the following two conditions:

(1) this device may not cause harmful interference, and
(2) this device must accept any interference received, including interference that may cause undesired operation.

(Identification of regulations/standards)

This declaration is the responsibility of the manufacturer/importer

SHENZHEN I-PANDA NEW ENERGY TECHNOLOGY & SCIENCE CO., LTD.
Bolck H, Juyin Technology Industrial Park, Buji St.,
Longgang Dist., Shenzhen, Guangdong, China

(Name /Address)

MANUFACTURER / IMPORTER

TEST LABORATORY

This is the results of test that was carried out by Shenzhen BST. from the submitted type samples of the product is in conformity with the specification of the respective standards.
The certificate holder has the right to fix the FCC-mark on the product complying with the required rules.

SHENZHEN BST TECHNOLOGY CO.,LTD. APPROVED

Christina
Manager
May 20, 2014

Shenzhen BST Technology Co.,Ltd.
Add: Building No.23-24, Zhiheng Industrial Park, Guankouer Road, Nantou,Nanshan District,Shenzhen,Guangdong,China,
Certificate Search: http://www.bst-lab.com, Tel:400-882-9628, 8009990305, E-mail:christina@bst-lab.com

Best Service of Testing
since2003

Certificate of Compliance

Certificate NO. : **BST14050326Y-1RC-4**

Applicant : **SHENZHEN I-PANDA NEW ENERGY TECHNOLOGY & SCIENCE CO., LTD.**
Bolck H, Juyin Technology Industrial Park, Buji St., Longgang Dist., Shenzhen, Guangdong, China

Manufacturer : **SHENZHEN I-PANDA NEW ENERGY TECHNOLOGY & SCIENCE CO., LTD.**
Bolck H, Juyin Technology Industrial Park, Buji St., Longgang Dist., Shenzhen, Guangdong, China

Product Name : **PURE SINE WAVE INVERTER WITH CHARGER AND UPS**

Trade Name : **I-PANDA**

Main Test Model : **I-P-TPI-6000W**

Additional Model : **I-P-TPI-1000W, I-P-TPI-2000W, I-P-TPI-3000W, I-P-TPI-4000W, I-P-TPI-5000W**

Test Standard : **EPA3050B:1996、EN1122B:2001、EPA3052:1996、EPA3060A:1996、EPA7196A:1992、EPA3540C:1996、EPA8270D:2007、IEC62321:2008**

As shown in the Test Report No. : **BST14050326Y-1RR-4.**

The EUT described above has been consolidated by us and found in compliance with the council RoHS directive－2011/65/EU.

SHEN BST TECHNOLOGY CO LTD APPROVED

RoHS

Christina
Manager
May 20, 2014

Shenzhen BST Technology Co.,Ltd.
Add: Building No.23-24, Zhiheng Industrial Park, Guankouer Road, Nantou,Nanshan District,Shenzhen,Guangdong,China
Certificate Search: http://www.bst-lab.com, Tel:400-882-9628, 8009990305, E-mail:christina@bst-lab.com

□□
1. □□□OEM□ODM□□□
2. □□□□□2□□□□□□□□□□

3. 24个月保修;一生时间的延长技术服务。
4. 您的任何问题都会由专业的技术团队进行指导。
5. 免费提供技术的研究和讨论的产品，每年提供的。

关于我们及联系方式