I-P-SPCPower Inverter with Built-in Solar Charge Controller 1000W

Application

1)Off-grid solar power system

2) Utility and solar complementarypower generation system

Features

1) Easy to install. To configure a solarsystem, users just need to connect it with solar panels and batteries.

2)CPU management,Intelligentcontrol,modular design

3)LEDs LCD display.LCD can display various parameters(such as the output voltage, frequency,working mode)

4)Multifunction design, AVR UPS function.Users don’t need to buy solar, controller, AC charger or stabilizer.

5) Externalbattery connection, it’s convenient for users to expand use time and back-uppower time

6)With super load-carrying ability and highload capacity, this series of inverterscan not only drive resistance load; but also various kinds of inductive loads suchas motor, air conditioner, electric drills, fluorescent lamp, gas lamp. It candrive almost any kinds of load

7)Low frequency pure sine wave circuitdesign, stable quality, easy to maintenance, low failure rate and long servicelife (under proper operation, it can last at least 5 years)

8) Perfect protection: low voltageprotection, high voltage protection, over temperature protection, short-circuitprotection, overload protection

9) CE / EMC / LVD/RoHS /FCC approvals

10) 2 years warranty,life-long technical support

Off-grid solar power system

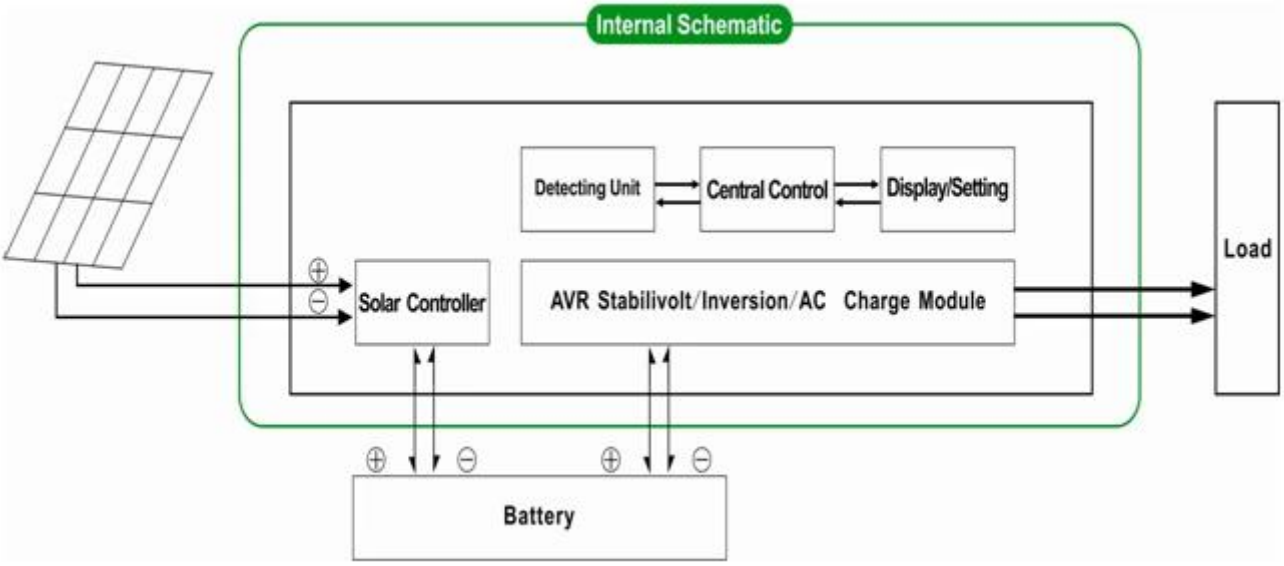

Utility and solar complementarypower generation system

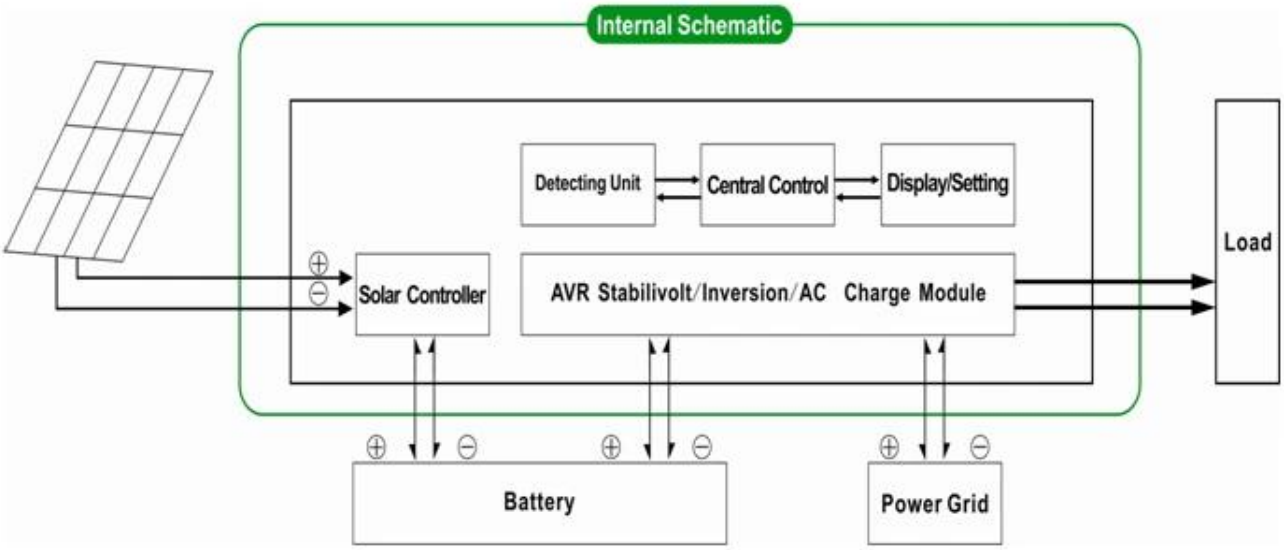

Parameter

Mode	1500VA
Rated Output Capacity	1000W

Peak Power		2000W
Battery Voltage(DC)		24V
PWM Solar Controller	Voltage	24V
	Current	20A
	PV Max Input Voltage	24V System□50V
Size W×D×H(mm)		335*165*375
Packing Size W×D×H(mm)		355*185*395
Net Weight (kg)		14
Gross Weight (kg)		16
General Parameter		
Working Mode (Setting)	1	Utility first (AC first) battery standby mode
	2	Sleep Mode,no utility,load’s power is over 5% of rated output power, Inverter start to work automatically
	3	Battery first (DC first)utility standby mode
AC Input	Voltage	220V±35% or 110V+35%□Optional□
	Frequency	50Hz±3% or 60Hz±3% □Optional□
AC Output	Voltage	220V±3% or 230V±3 or240V±3% or 100V±3% or 110V±3% (Optional)
	Frequency	50Hz±0.5 or 60Hz±0.5 (Optional)
Utility charge	AC Charge Current	0~15A
	Charge Time	Depend on battery capacity and quantity
	Battery Protection	Automatic detection, Charge and discharge protection□Intelligent Management
PV Charge		Total Current of PV Input Should Be Less Than Rated Current of PWM solar controller
Display	Display Mode	LCD+LED
	Display Information	Input voltage□output voltage□output frequency□battery capacity□Load condition□Status Information
Output Wave Type		Pure sine wave output,Total Harmonic Distortion THD≤3
Overload Ability		□120% 1 min□□130% 10s
Power Consumption	Sleep Mode	1~6W
	Normal Mode	1~3A
Conversion Efficiency		80%~90%
Transfer Time		□5ms □AC to DC / DC to AC□
Protection		Overload output□short-circuit□high-voltage input□low-voltage input□overheat
Environment	Temperature	-10℃□50℃
	Humidity	10%□90%
	Altitude	≤4000m

Theabove is our standard parameter. Subject to change without prior notice.

Wehave our own professional inverter and controller R&D team and we provide technical support and OEM ODMservice

Thecontroller information above is our company’s standard parameter.It can bechanged to other PWM solar charge controller.

ConnectionDiagram

I-P-SPC-Series System

I-P-SPC-Series Inverter+Solar Controller