I-P-SPC Series LowFrequency Solar Power Inverter with Built-in SolarCharge Controller 700W



Component

1)Highquality low frequency pure sine wave inverter(with utility charge

function and UPS function)

2)Built-in PWMsolar power charge controller

Application

1)Off-grid solar power system

2) Utility and solar complementarypower generation system

Features

1) Easy to install. To configure a solarsystem, users just need to connect it with solar panels and batteries.

2)CPU management,Intelligent control,modulardesign

3)LEDs LCD display. LCD can display variousparameters(such as the output voltage, frequency, working mode)

4)Multifunction design, AVR UPS function.Users don't need to buy solar, controller, AC charger or stabilizer.

5) Externalbattery connection, it's convenient for users to expand use time and back-uppower time

6)With super load-carrying ability and highload capacity, this series of inverterscan not only drive resistance load; but also various kinds of inductive loads suchas motor, air conditioner, electric drills, fluorescent lamp, gas lamp. It candrive almost any kinds of load

7)Low frequency pure sine wave circuitdesign, stable quality, easy to maintenance, low failure rate and long servicelife (under proper operation, it can last at least 5 years)

8) Perfect protection: low voltageprotection, high voltage protection, over temperature protection, short-circuitprotection, overload protection

9) CE / EMC / LVD/ RoHS /FCC approvals

10) 2 years warranty, life-long technical support

Function

Off-grid solar power system

1. When connected withbattery and AC loads,users can set it to normal working mode or sleep mode.

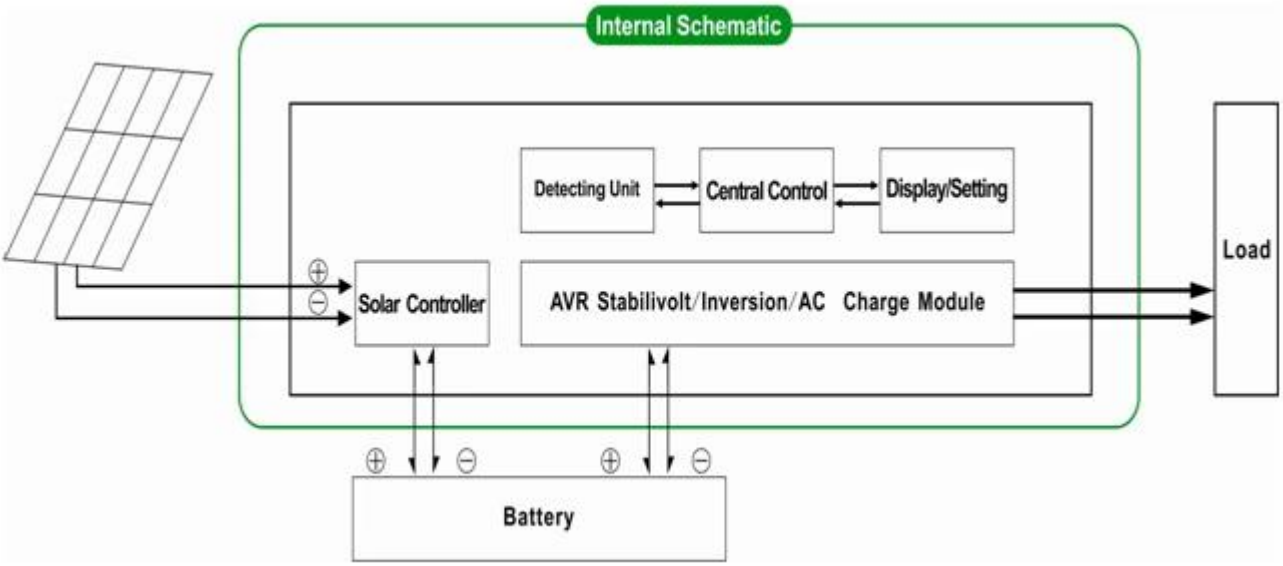

1.1 Normal working mode FREQUENCY in the LCD display is set to 01. No matter it's connected AC loads or not, theinverter always convert DC to AC. It'sready to supply power to the AC loads. In this mode, the LCD will displayoutput voltage as bellow:

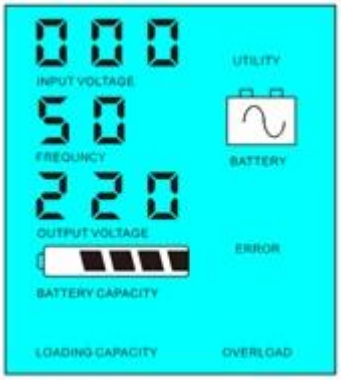

1.2 Sleep mode FREQUNCYin the LCD display is set as 02.If the power of the connected AC loads is lowerthan 5% of the inverter's rated power, there will be no output from theinverter. Only the chip of inverter is working. The power consumption of theinverter is only 1-6W. The LCD shows the output voltage 0. If the power of theconnected loads is over 5%,then the inverter will automatically convert DC toAC to supply power for the loads within 5s. The LCD shows the output voltage.As shown below:

Load's power< 5% of inverter's rated power

Load's power> 5% of inverter's rated power

Kindly note:

1) Only the solar panel charges thebattery

2) Off-grid solar power system. It issuitable for areas that are lack of utility or plentiful solar

Utility andsolar complementary power generation system

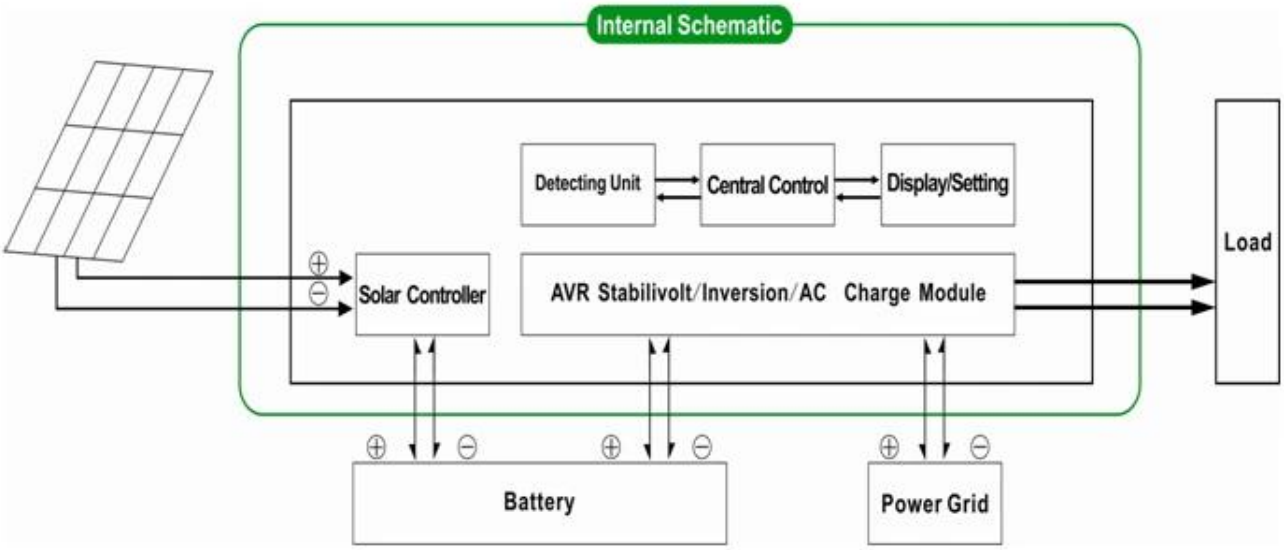

2. UPS function When the inverter is connected to battery andutility, users can set it to utility first (AC first) battery standby mode orbattery first (DC first)utility standby mode.

2.1.Utilityfirst (AC first) battery standby mode : FREQUENCY in the LCD display is set to 01.When utility and battery are connected to the inverter, utility will supplypower to the loads prior. When utility is cut off, the battery willautomatically continue to supply power via power inverter.

Stepsare as follows:

Step1: When utility is available, it will drive the loads directly after voltagebeing stabilized and at the same time charge batteries via power inverter .

Step2: When utility is cut off, the inverter will convert DC to AC automatically toensure uninterrupted power supply within 5ms.

Step3: When utility is available again, inverter will automatically transfer toutility supplying power to loads and charge batteries via power inverter at thesame time.

See Workflowas below.

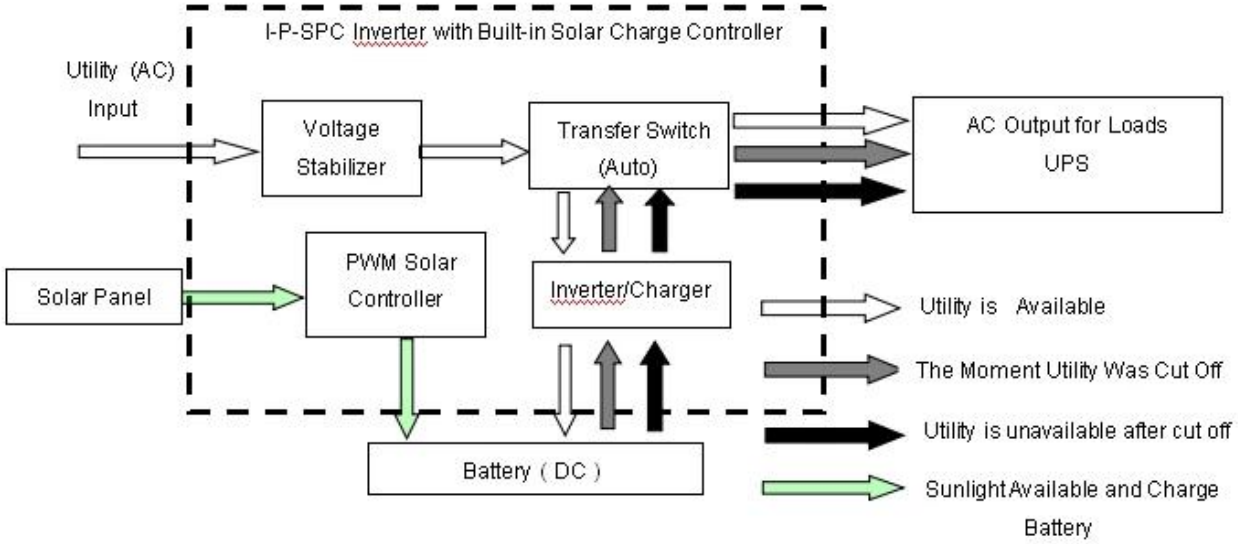

LCDdisplayed as bellow:

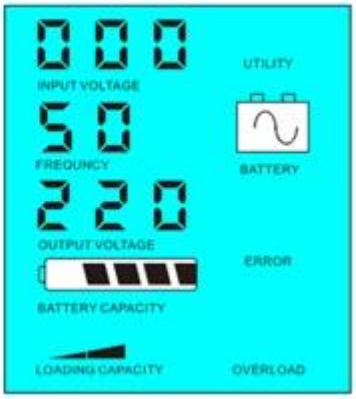

Utility supplypower and charge battery Withoututility and battery supply power

Kindly note:

1) There are 2 ways to charge thebattery, utility and solar panel

2) This system is suitable for powersystems built in areas that are lack of utility. Or people can use solar andutility at the same time.

2.2. Batteryfirst (DC first)utility standy mode: FREQUENCY in the LCD display is set as 03. When utility andbattery are connected to the inverter, battery will supply power to the loadsprior to utility. When battery capacity is not enough, utility will continue tosupply power automatically.

Steps are as follows:

Step1: When battery is available, it will drive the AC loads via power inverter.

Step2: When battery does not have enough power, it will automatically transfer toutility supplying power to the loads

Step3: After the battery is fully charged (e.g. by solar or wind chargecontroller), it will automatically transfer to battery

supplying power to theloads via power inverter.

See Workflowas below.

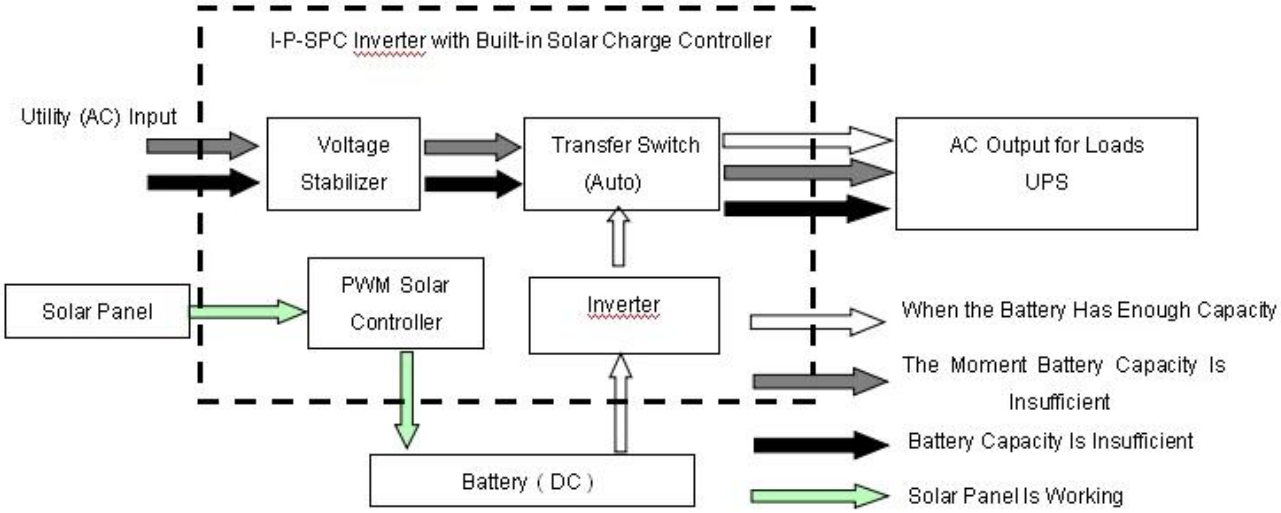

LCD displayed as bellow:

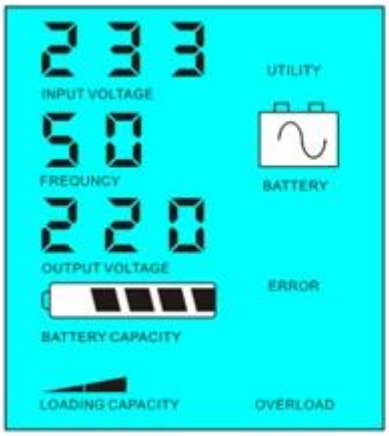

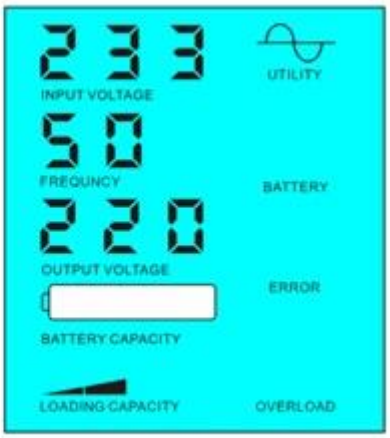

Battery available to supply power Batteryunavailable,utility supply power

Kindly note:

1) There is only one wayto charge the battery: solar panel

2) Thissystem is suitable for areas where electricity is expensive or environmentalareas where solar power can be fully used to save utility bill.such as homesolar&wind system,streetlight solar&wind system

Parameter

Mode	1000VA
Rated Output Capacity	700W
Peak Power	1500W
Battery Voltage(DC)	24V

PWM Solar Controller	Voltage	24V
	Current	20A
	PV Max Input Voltage	24V System□50V
Size W×D×H(mm)		335*165*375
Packing Size W×D×H(mm)		355*185*395
Net Weight (kg)		12
Gross Weight (kg)		13
General Parameter		
Working Mode (Setting)	1	Utility first (AC first) battery standby mode
	2	Sleep Mode,no utility,load’s power is over 5% of rated output power, Inverter start to work automatically
	3	Battery first (DC first)utility standby mode
AC Input	Voltage	220V±35% or 110V+35%□Optional□
	Frequency	50Hz±3% or 60Hz±3% □Optional□
AC Output	Voltage	220V±3% or 230V±3 or240V±3% or 100V±3% or 110V±3% (Optional)
	Frequency	50Hz±0.5 or 60Hz±0.5 (Optional)
Utility charge	AC Charge Current	0~15A
	Charge Time	Depend on battery capacity and quantity
	Battery Protection	Automatic detection, Charge and discharge protection□Intelligent Management
PV Charge		Total Current of PV Input Should Be Less Than Rated Current of PWM solar controller
Display	Display Mode	LCD+LED
	Display Information	Input voltage□output voltage□output frequency□battery capacity□Load condition□Status Information
Output Wave Type		Pure sine wave output,Total Harmonic Distortion THD≤3
Overload Ability		□120% 1 min□□130% 10s
Power Consumption	Sleep Mode	1~6W
	Normal Mode	1~3A
Conversion Efficiency		80%~90%
Transfer Time		□5ms □AC to DC / DC to AC□
Protection		Overload output□short-circuit□high-voltage input□low-voltage input□overheat
Environment	Temperature	-10℃□50℃
	Humidity	10%□90%
	Altitude	≤4000m

Theabove is our standard parameter. Subject to change without prior notice.

Wehave our own professional inverter and controller R&D team and we provide technical support and OEM ODM service

Thecontroller information above is our company’s standard parameter.It can bechanged to other PWM solar charge controller.

ConnectionDiagram

Others

Pleasesee the outline of the design,technical documents,user manuals,productbrochures, etc.Research and development department made 1st edition on May 5, 2014..