Introduction

In DC/AC inversion mode, users can set this series of inverters to normal working mode or sleep mode. In utility mode, it has Auto Voltage Regulation (AVR) function, utility charging function (AC first model) and UPS function. This multifunctional low frequency pure sine wave inverter has the advantages of stable quality, strong load-carrying ability and long service life. It also can work in poor environment. It is the second generation of our low frequency pure sine wave inverter I-P-XD-series.

Features

1、pure sine wave output, full power

2、CPU control,intelligent control,modular design

3、LCD display various parameters

4、Multifunction design (AVR, UPS), extra charger is not needed and electric appliances can be protected.

5、External battery connection, it's convenient for users to expand use time and back-up power time

6、With super load carrying ability and high load capacity, this series of inverters can not only drive resistance load; but also various kinds of inductive loads, such as motor, air conditioner, electric drills, fluorescent lamp, gas lamp.

7、Low frequency circuit design, stable quality, low failure rate and long service life (under proper operation, it can last at least 5 years)

8、Perfect protection: low voltage protection, high voltage protection, over temperature protection, short-circuit protection, overload protection, alarm alert

9、CE / EMC / LVD/ RoHS Approvals

10、Two years warranty, life-long technical support

Function

1、DC to AC inversion function in inversion mode (only connected with batteries and loads) ,users can set it to normal working mode or sleep mode

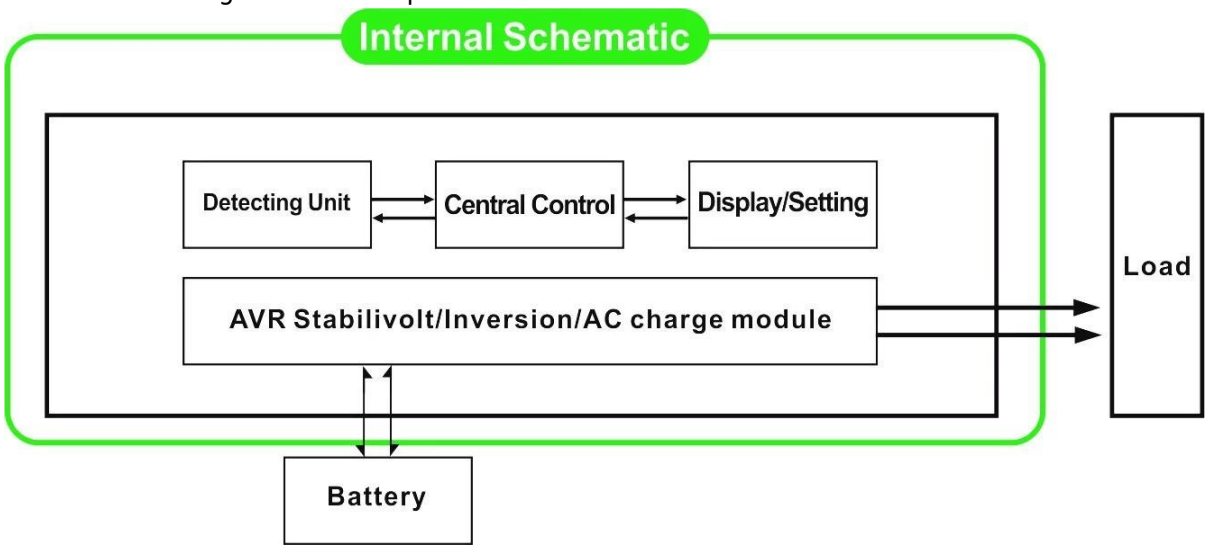

1.1、Normal working mode、FREQUNCY in the LCD display is set to 01. No matter it's connected AC loads or not, the inverter always convert DC to AC. It's ready to supply power to the AC loads. In this mode, the LCD will display output voltage as bellow:

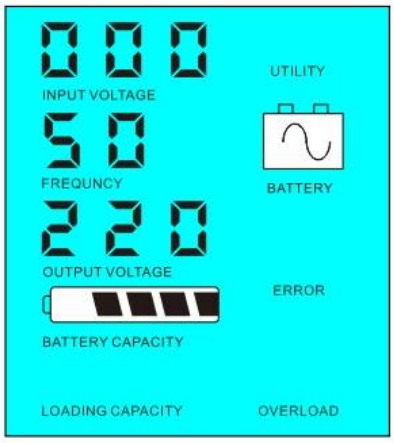

1.2Sleep modeFREQUNCY in the LCD display is set as 02.If the power of the connected AC loads is lower than 5% of the inverter's rated power, there will be no output from the inverter. Only the chip of inverter is working. The power consumption of the inverter is only 1-6W. The LCD shows the output voltage 0. If the power of the connected loads is over 5%,then the inverter will automatically convert DC to AC to supply power for the loads within 5s. The LCD shows the output voltage. As shown below:

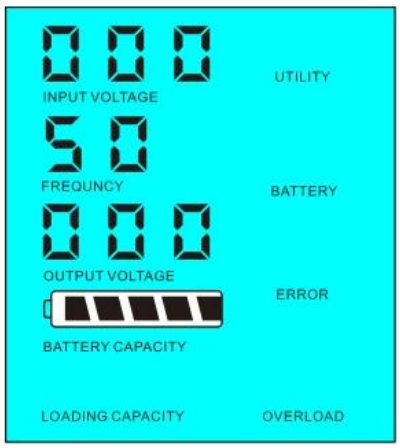

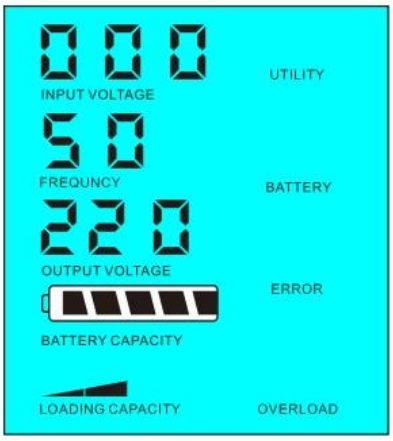

Load's powerrated power

Load's powerrated power

2UPS function When the inverter is connected to battery and utility, users can set it to utility first (AC first) battery standby mode or battery first (DC first)utility standy mode.

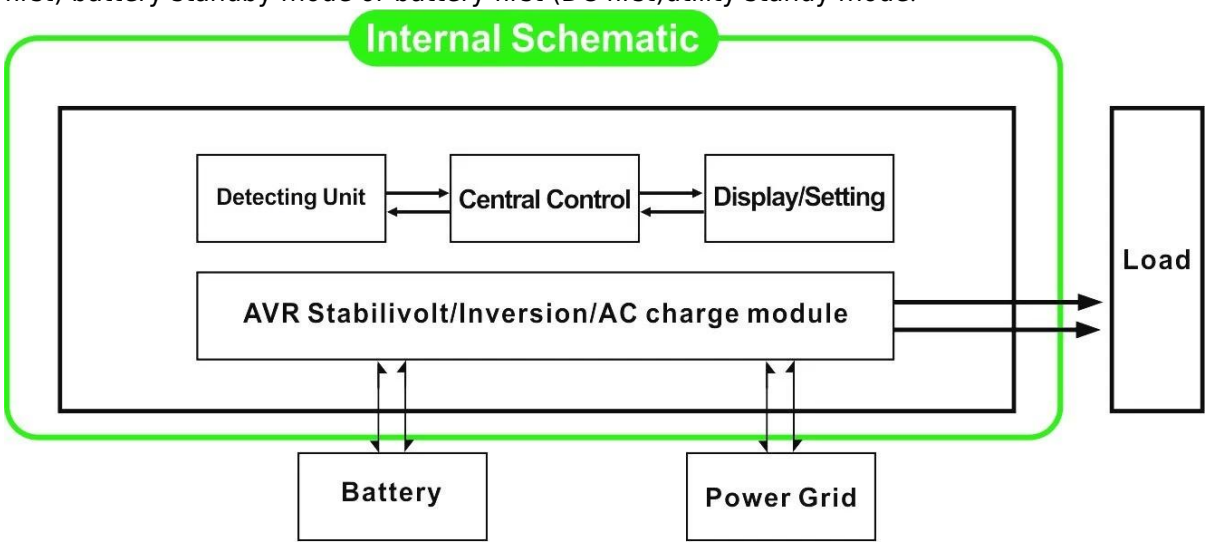

2.1Utility first (AC first) battery standby mode : FREQUENCY in the LCD display is set to 01. When utility and battery are connected to the inverter, utility will supply power to the loads prior. When utility is cut off, the battery will automatically continue to supply power via power inverter.

Steps are as follows:

Step 1: When utility is available, it will drive the loads directly after voltage being stabilized and at the same time charge batteries via power inverter .

Step 2: When utility is cut off, the inverter will convert DC to AC automatically to ensure uninterrupted power supply within 5ms.

Step 3: When utility is available again, inverter will automatically transfer to utility supplying power to loads and charge batteries via power inverter at the same time.

See Workflow as below.

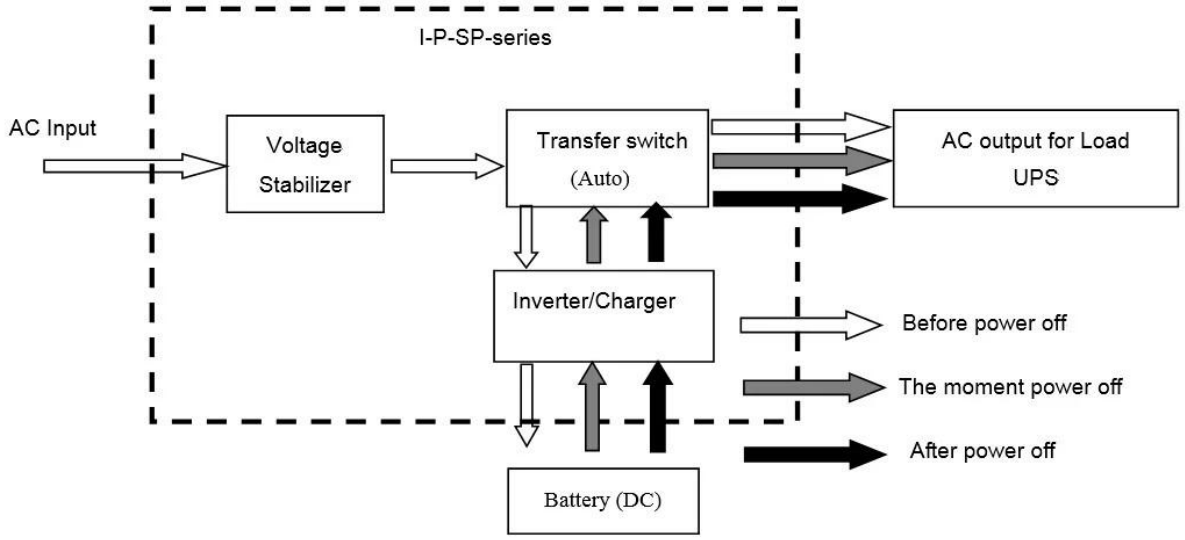

LCD displayed as bellow:

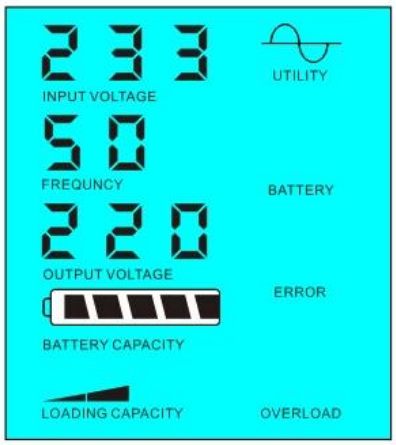

Utility supply power and charge battery

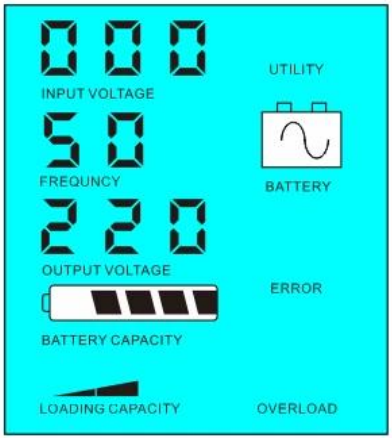

Utility is unavailable, battery supply power

2.2Battery first (DC first)utility standby UPS mode: FREQUENCY in the LCD display is set as 03. When utility and battery are connected to the inverter, battery will supply power to the loads prior to utility. When battery capacity is not enough, utility will continue to supply power automatically.

Steps are as follows:

Step 1: When battery is available, it will drive the AC loads via power inverter.

Step 2: When battery does not have enough power, it will automatically transfer to utility supplying power to the loads

Step 3: After the battery is fully charged (e.g. by solar or wind charge controller), it will automatically transfer to battery supplying power to the loads via power inverter.

See Workflow as below

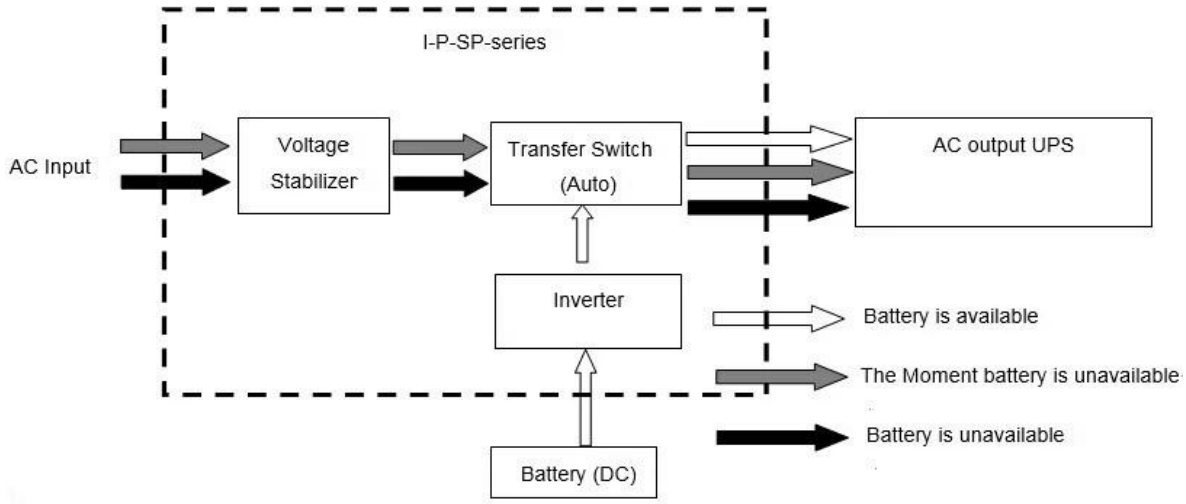

LCD displayed as bellow:

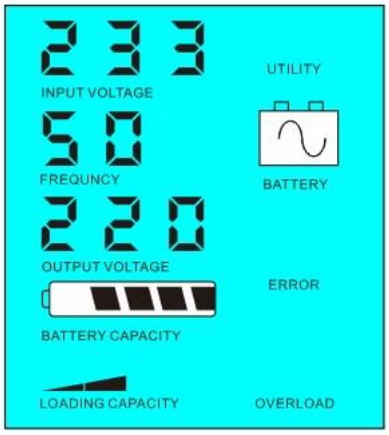

Battery is available

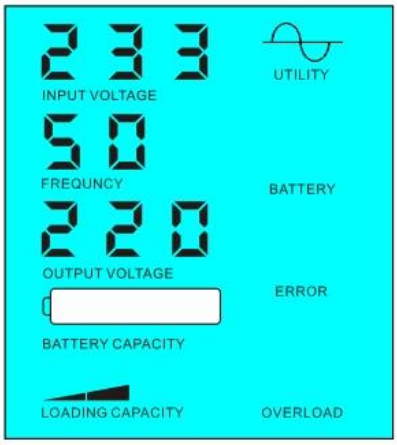

Battery is not available,utility supply power

Parameter

Model Parameter		3000VA
Rated Output Capacity		2000W
Peak Power		4000W
Battery Voltage(DC)		24V/48V/96V(optional)
Size W×D×H(mm)		350*220*460
Packing Size W×D×H(mm)		370*240*480
Net Weight (kg)		23
Gross Weight (kg)		25
General Parameter		
Working Mode	1	Utility first (AC first) battery standby mode
Setting	2	Sleep Mode,no utility,load's power higher than 5% of inverter rated output power,it will start to work automatically
	3	Battery first (DC first)utility standby UPS mode
AC Input	Voltage	220V±35% or 110V+35%optional
	Frequency	50Hz±3% or 60Hz±3% optional
AC Output	Voltage	220V±3% or 230V±3 or 240V±3% or 100V±3% or 110V±3% (optional)
	Frequency	50Hz±0.5 or 60Hz±0.5 (optional)
Battery charge	AC Charge Current	0~15A
	Charge Time	Depend on battery capacity and quantity
	Battery Protection	Automatic detection, Charge and discharge protectionIntelligent Management

Display	Display Mode	LCD
	Display Information	Input voltage、output voltage、output frequency、battery capacity、Load condition、Status Information
Output Wave Type		Pure sine wave output,Total Harmonic Distortion THD≤3
Overload Ability		、120% 1 min、、130% 10s
Power Consumption	Sleep Mode	1~6W
	Normal Mode	1~3A
Conversion Efficiency		80%~90%
Transfer Time		、5ms 、AC to DC / DC to AC、
Protection		Overload ,Short-circuit,High input voltage,Low input voltage,Overheat
Environment	Temperature	-10℃、50℃
	Humidity	10%、90%
	Altitude	≤4000m

The above is our standard parameter. Subject to change without prior notice.
We have our own professional inverter and controller R&D team and we provide technical support and OEM ODM service.

Others

Please see the outline of the design,technical documents,user manuals,product brochures, etc.Research and development department made 2th edition on May 5, 2014.

AC OUTPUT 220V
FUSE
BATTERY ON
BATTERY OFF
WARNING
BATTERY INPUT
AC INPUT
AC OUTPUT