High quality Intelligent Inverter with Built-in MPPT Controller I-P-HPC series

Introduction

Pure sine wave inverter with built-in MPPT controller I-P-HPC-Series is a module design. It has the advantages of high conversion efficiency, low power consumption and strong load-carrying ability. With intelligent control, users can set charging mode, (Utility as complementary power) AC first mode or DC first mode, timing inversion mode and timing utility mode, on/off mode. It is one of advanced hybrid inverter & controller in the world.
Application
1.Off-grid solar power system
2.Solar and utility complementary power system

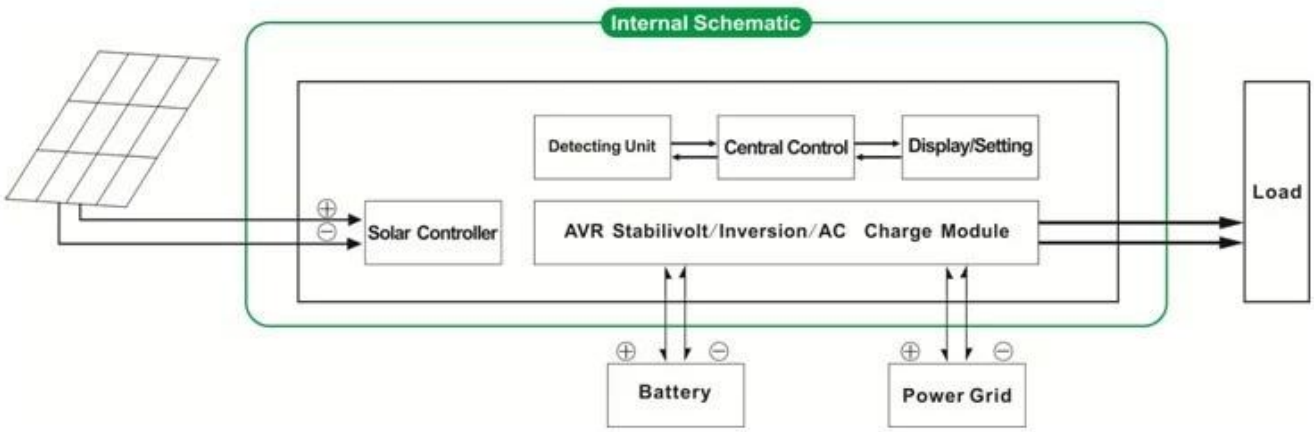

Feature

1.Easy to install.To configure a solar system, users just need to connect it with solar panels and batteries
2.CPU management, intelligent control, modular design, LCD display
3.Built-in MPPT controller, high charging efficiency
4.Low power consumption, high conversion efficiency
5.Intellectual multi-function, it's convenient for users to make full use of solar energy in different situation
6. External battery connection, it's convenient for users to expand back-up power time
7.Strong load-carrying ability, low failure rate, easy to maintenance and long service life (under proper operation, it can last at least 5 years)
8.Perfect protection:low voltage protection, high voltage protection, over temperature protection, short-circuit protection, overload protection
9.CE / EMC / LVD/ RoHS Approvals
10.Two years warranty, life-long technical support

Function

1.Charging function
There are 2 modes as shown bellow:
1.1 PV only mode: when PV and utility are both connected to the inverter, only the PV will charge the battery while utility will not charge the battery.
1.2 PV+AC hybrid mode: when PV and utility are both connected to the inverter, both PV and utility will charge the battery.

2.Utility as complementary power UPS function
There are 2 kinds of complementary modes, shown as bellow:
2.1 AC first, DC standby UPS mode

When utility and battery are connected to the inverter, utility will supply power to the loads preferentially. When utility is cut off, the battery will automatically continue to supply power to the loads.

Steps are as follows:
Step 1: When utility power is available, it will drive the loads directly after voltage being stabilized and charge batteries at the same time.
Step 2: When utility power is cut off suddenly, the inverter will convert DC to AC automatically to ensure uninterrupted power supply within 5ms.
Step 3: When utility power is available again, it will automatically transfer to utility supplying power to loads and charge batteries at the same time.

See Workflow as below:

3.Timing function

There are 2 kinds of timing mode:
3.1 On/Off mode: Users can set specific time to turn on/off the output of the inverter.

3.2 Working mode: Battery or utility switchable mode. Users can set specific time when to use battery or utility supplying power (suitable for areas where electric fee is charged differently in different period)

4.Recording/checking function
4.1 Inverter fault checking: Users can check the inverter fault information
4.2 Discharge time checking: Users can check the discharge time of the battery
The “optional” parameter can be set as per customer’s requirement
The above is our standard parameter. Subject to change without prior notice.
We have our own professional inverter and controller R&D team and we provide technical support and OEM ODM service

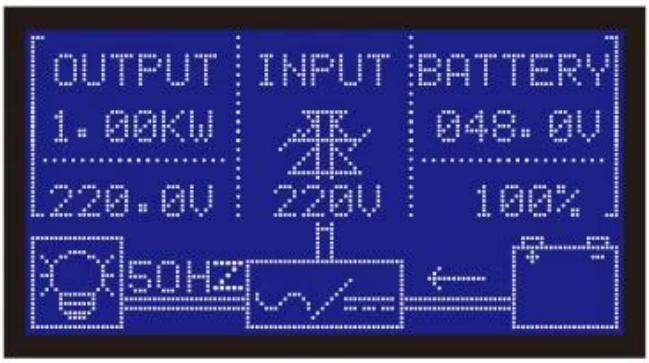

Parameter

Parameter Model		1000W	1500W	2000W	3000W	4000W	5000W
Rated Output Power		1000W	1500W	2000W	3000W	4000W	5000W
Peak Power		2000W	3000W	4000W	6000W	8000W	10000W
Battery (Lead-acid battery)		24V	24V/48V(optional)			48V	
Charging Parameter							
Charge Mode(setting)		PV charge					
		PV charge + utility charge					
MPPT Solar Controller	Voltage	24V	24V/48V			48V	
	Current	20A	25A	30A	40A	40A	40A
	Max PV Input Voltage	100V					
	PV Charge Efficiency	95%~99%					
	Max PV Input Power	568W	24V: 710W 48V1420W	24V: 852W 48V: 1704W	24V:1136W 48V: 2272W	2272W	2272W
Utility	AC Charge Current	0~15A					
	Charge Mode	3-Stage Charging					
Inversion parameter							
AC Output	Voltage	220V±3% or 230V±3 or 240V±3% or 100V±3% or 110V±3% (optional)					
	Frequency	50Hz±0.5 or 60Hz±0.5 (optional)					
Output wave type		Pure sine wave output, Total Harmonic Distortion THD≤3					
Overload ability		>120% 1 min, >130% 10s					
Power Consumption (under normal working mode)		0.4A	24V: 0.5A 48V: 0.4A	24V: 0.7A 48V: 0.45A	24V: 0.7A 48V: 0.5A	0.6A	0.65A
Power Consumption (under sleep mode)		1-6W					
Inverter Conversion Efficiency		85%~92%					
Utility Mode							
AC Input	Voltage	220V±35% or 110V+35%(optional)					
	Frequency	The same as utility’s frequency					
AC Output	Voltage	220V±5% or 110V+5%(optional)					
	Frequency	The same as utility’s frequency					
Overload Ability		>120% 1 min,>130% 10s					
(AC first or DC first) priority							
UPS Output(setting)		AC first, DC standby					
		DC first, AC standby					
Switch Time		<5ms (AC to DC / DC to AC)					
Power On (setting)		Set by users					
		Timed on / off AC output automatically					
General Parameter							
Display	Display Mode	LCD+LED					
	Display Information	Input voltage, output voltage, output frequency, battery capacity, load condition, status Information					
Protection		Overload, short-circuit, high-voltage input, low-voltage input, overheat					
Environment	Temperature	-10℃~50℃					
	humidity	10%~90%					
	Altitude	≤4000m					
Size W×D×H(mm)		438*208*413				450*246*468	
Packing Size W×D×H(mm)		520*310*460				540*300*518	
Net Weight (kg)		15	17	19	25	34	35
Gross Weight (kg)		16	18	20	27	40	41

Photos

Grid
HPC High quality Intelligent Inverter
with Built-in MPPT Controller
AC Loads
PV
Batteries

Rs232
B0
B1
B2
B3
B4
B5
B6
B7
B8
B+
MONOMER BATTERY VOLTAGE DETECTION
Battery Switch
ON
OFF
AC Input Switch
ON
OFF
Solar Input
DC Output
S+ S- L+ L-
Battery Input
Red
Black
Input voltage 48VDC 96VDC
AC INPUT
N L
N L
AC OUTPUT
Pay attention to high voltage